DEUBLIN
HOERBIGER Rotary Solutions

ROTARY UNIONS

for Machine Tools | Machining Centers | Transfer Lines

Machine Tool Catalog

www.ngclark.com.au

4 Steps to Finding the correct Union Series for your Machine Tool Application

1. Does the machine have a single supply connection (for example, coolant) or multiple connections (such as a combination of coolant, air, and hydraulic oil)?
2. What fluid or fluids must be transferred by the rotary union?
3. What is the maximum pressure required?
4. What is the maximum spindle speed required?

1 No of inputs	2 Fluid(s) to Transfer	3 Max. Pressure	4 Maximum Speed (rpm) up to 12,000	up to 15,000	up to 20,000	up to 24,000	over 24,000
Single	Coolant or MQL (always present during rotation)	up to 105 bar	1116 series (p. 13) up to 70 bar	1005 series (p. 11) 1101 series (p. 12)	Contact Deublin		
		up to 150 bar	1108 series (p. 14) and 1113 series (p. 20)				Contact Deublin
		up to 180 bar	9012-810 series (p. 28) up to 110 bar		1117 series (p. 23)		
	Coolant or MQL – unlimited dry run possible – (rotation with no coolant is possible)	up to 140 bar	902 series (p. 22) up to 80 bar	1109 series (p. 15) 1103 series (p. 20)		1111 series (p. 16) 1103 series (p. 20)	1109 series (p. 16)
		up to 150 bar	1109 series (p. 16) and 1103 series (p. 20)				Contact Deublin
		up to 210 bar	1121 series (p. 24 and p. 28)				
	Coolant or MQL or Compressed Air – dry run possible – (operation without coolant possible)	up to 140 bar	1114 series (p. 17) and 1103 series (p. 20)			1114 series (p. 18) 1103 series (p. 20)	1114 series (p. 18 and p. 22)
			993-880 series (p. 28) up to 80 bar		1124 series (p. 25 and p. 28) and 1154 series (p. 26)		
		up to 150 bar	1114 series (p. 18) and 1103 series (p. 20)				1124 series (p. 25)
		up to 210 bar	1159 series (p. 27)				
	Coolant, Cutting Oil, MQL, Compressed Air	up to 140 bar	1114 series (p. 19)				1124 series (p. 19)
	Multi-Media Hydraulic, Coolant, Lubricant, MQL, Compressed Air (for defined dry run cycles)	up to 70 bar	1116 (p. 21) and 1005 series (p. 21 up to 10,000 rpm)	1101 series (p. 21) up to 105 bar	Contact Deublin		
	Leak Sensor Technology	up to 150 bar	SpindleShield® series 1103 and 1113 (p. 20)				

No of inputs	Fluid(s) to Transfer	Max. Pressure	up to 10,000	up to 12,000
Multiple	Hydraulic Oil + Hydraulic Oil	up to 40 bar	2620-004-252 (p. 29)	
		up to 140 bar	2620-04x-xxx (p. 29)	
	Hydraulic Oil + Compressed Air	up to 140 bar	2620-16x-xxx (p. 29)	
	Coolant + Compressed Air	up to 140 bar	2620-26x-xxx (p. 29)	
	Compressed Air + Compressed Air	up to 10 bar	2620-52x-xxx (p. 29)	
	Hydraulic Oil + Cooling Oil + Compressed Air + Coolant	up to 140 bar	2630, 2640, 2650 series (p. 30)	Contact Deublin
	Hydraulic Oil + Cooling Oil + Compressed Air + Coolant	up to 140 bar	260x series (p. 31) up to 7.000 rpm	
	Multi-media Hydraulic, Coolant, Cooling Water, MQL, Compressed Air, Vacuum	up to 200 bar	Hybrid-Multi-Passage series (p. 32) up to 6.000 rpm	

Bearing-supported (one-piece) unions Bearingless (two-piece) unions Multi-passage unions

SUBJECT TO BOTH TECHNICAL AND DIMENSIONAL CHANGES WITHOUT PRIOR NOTICE – UNLESS SPECIFICALLY TOLERANCED ALL DIMENSIONS ARE FOR REFERENCE. ALL DIMENSIONS IN MM, EXCEPT AS NOTED OTHERWISE.

How to get the most value from this catalog

If you are less familiar with machine tool applications of rotary unions, or if you would like a quick review, first please read the "Information" sections. These sections contain important details about designing, installing and using rotary unions in machine tools.

If you understand completely the principles of designing machines to use rotary unions, please use either the Selection Chart on the inside cover or Table of Contents to find the appropriate product page. These pages contain dimensions, performance data, and other necessary application information.

If you don't see what you need, please contact your local Deublin office directly. Telephone, email, and address information are shown on the back cover of this catalog. Unions in this catalog are representative of most common applications, but other variations are available. Deublin can customize the interface between machine and union, such as hose connections or rotor threading, to your specifications. Also, Deublin easily can develop complete unions to meet special pressure, speed, or media requirements.

"If you don't see it, we probably have it. If we don't have it, we can create it."

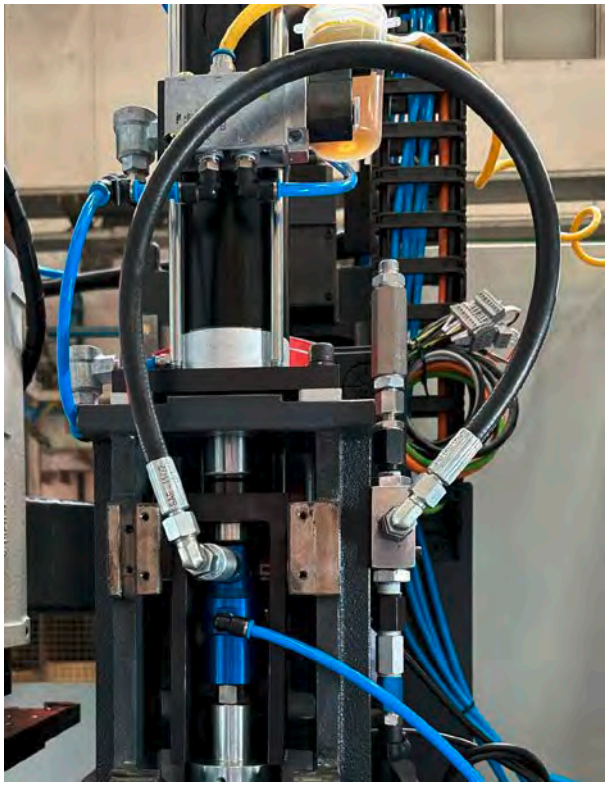

Deublin Rotor-mounted Union on vertical machining center.

Table of Contents

Information

Operating Principles of Rotary Unions 4
Selecting the Right Union for Your Application 5, 6
Mounting Tolerances 7
Drain and Supply Hose Connections 8
Installation Techniques 9
Coolant Filtration and Maintenance 10
Thread Equivalence 10

Bearing-Supported Unions

"Closed Seal" Designs – when media is present during rotation
1005, 1101, 1116, 1108 11-14
Pop-Off® Designs – when rotation without media is possible
1109, 1111 15-16
AutoSense® Designs – when both coolant and pressurized dry air are used interchangeably
1114 17-18
AutoSense Plus® Designs 19
SpindleShield® Designs – leak sensor
1103, 1113 20
1-Passage Design for various media combinations
1005/1101/1116 21
Flange Design 902, 1114 22

Bearingless Unions

"Closed Seal" Designs – when media is always present during rotation
1117 23
Pop-Off® Designs – when rotation without media is possible
1121 24
AutoSense® Designs – when both coolant and pressurized dry air are used interchangeably
1124, 1154, 1159 25-27
Compact Bearingless Cartridge Models 28

Multi-Passage Unions

2-Passage Designs – for various media combinations
2620 29
3 to 5-Passage Designs – for various media combinations
2630, 2640, 2650 30
3 to 8-Passage Multi-Channel Designs – for various media combinations
260x 31
Up to 10-Passage Hybrid-Multi-Passage Designs – for various media combinations 32

Slip Rings

Slip Ring Series SRC with Combo 33
Slip Ring Series SRD with Combo 34

General Information

Important Information 35
Deublin offices and contact information Back Cover

Please see page 6 for further explanations to the individual series.

Operating Principles of Rotary Unions

Advantage of Through-Spindle Coolant (TSC)

Nearly all modern machine tools and machining centres are equipped with so-called “flood coolant”. High-speed cutting tools require both cooling and lubrication to reduce the rate of tool wear and to prevent overheating, which degrade the tool’s strength. Flood coolant systems spray coolant fluid onto the work piece near the cutting tool. But for many machining operations, such as milling or hole drilling, these systems are less effective at getting coolant fluid to the cutting edge.

Without coolant, the flutes of the cutting tool can become packed with swarf, and the cutting edge loses hardness due to overheating. This leads to excessive wear and short tool life. Poor swarf removal also can cause a poor surface finish on the work piece.

In machining centres with through-spindle coolant (TSC), coolant fluid is conducted directly through the cutting tool to cool the cutting edge, reduce friction, and remove swarf. Coolant flows axially through a rotary union into the spindle and toolholder directly to the heat source. Compared to flood coolant systems, TSC pays for itself in terms of lower operating costs for tools and coolant. Better control of tool overheating also allows faster feed rates and higher productivity.

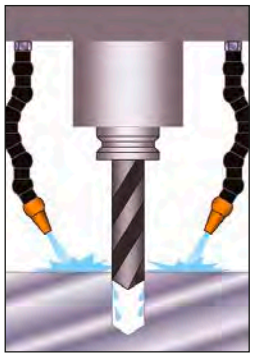

Flood Coolant

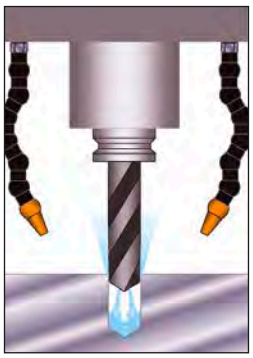

Through-Spindle Coolant

How Rotary Unions Work

A rotary union is a precision mechanical device used to transfer coolant fluid or media from a stationary source, such as a pump, into a rotating device, such as a spindle with cutting tool. The typical coolant fluid is water-based, consisting of approximately 85–95 % water for cooling, 2–12 % oil for lubricating the cutting edge, and a small amount of other chemicals for keeping the water and oil mixed and for other purposes. Deublin Rotary Unions also can transfer compressed air/oil mist, known as Minimum Quantity Lubrication (MQL), cutting oils, and even dry air. The exact capabilities vary by model number, so please consult the product pages of this catalog for details.

In certain machine tool applications, rotary unions also are used to transfer hydraulic fluid or air for clamping or sensing.

Parts of a Rotating Union

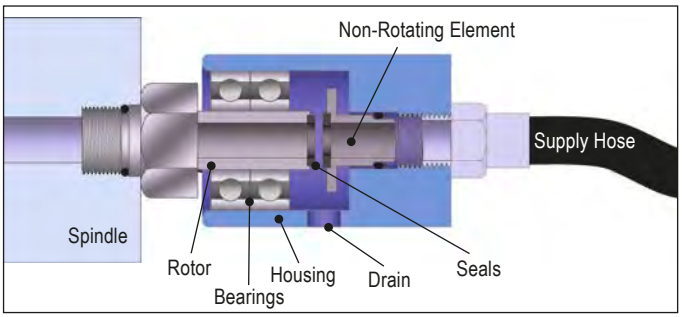

As shown in the picture above, a typical rotary union consists of a rotor that spins at the same speed as the machine tool spindle, a non-rotating element that closes precisely against the rotor, a housing that connects the supply hose to the non-rotating element, and seals that contain the coolant fluid. Bearing-supported unions connect the rotor to the housing with one or more bearings. Bearingless unions omit these bearings. Depending on the application, the housing may have one or more drain connections.

Seals are the heart of the rotary union. They must contain very high pressures while rotating at very high speeds. At 20,000 rpm, for example, the seals of a Deublin 1121 series coolant union are moving at a relative speed of nearly 16 feet per second (5 metres per second), while containing 2030 psi (140 bar) of fluid pressure!

Micro-lapped Deublin seal

For positive sealing, smooth rotation, and long service life, all Deublin seals are micro-lapped with proprietary machines and compounds to achieve an optical flatness of 2 light bands (23 millionths of an inch, or 0.58 microns). In addition, all Deublin coolant unions use seals made from special grades of silicon carbide. Deublin seals therefore have superior resistance to wear and heat accumulation, compared to lesser materials.

Finally, Deublin Rotary Unions are designed with balanced mechanical seals. With this technology, seal contact pressure and thrust load on the spindle are minimised, regardless of operating pressure. This reduces seal wear even further, resulting in longer life and more reliable performance.

Deublin Balanced Mechanical Seal
Partial line pressure is applied to seal face.

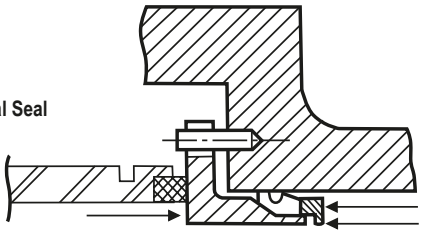

Selecting the right Union for your Application

Bearing-supported Rotor-mounted

Example: Deublin 1109 series

Bearing-supported Bore-mounted

Example: Deublin 1109 series

Bearingless

Example: Deublin 1117 series

Bearing or Bearingless?

Rotating unions for machine tool applications are available in bearing-supported and bearingless configurations. Each kind has advantages and disadvantages for the machine tool designer.

Bearing-supported unions are easy to install and replace, because of their one-piece design. Deublin makes two different mounting styles. The **rotor-mounted** style attaches to the spindle with a threaded rotor. The **bore-mounted** style slides into a precisely machined counterbore at the end of the spindle. A second advantage of both styles is that any leakage is channelled by the housing into a drain line. A third advantage is that rotor-mounted, bearing-supported unions absorb all axial forces (thrust load) on the spindle caused by coolant pressure. For both bore-mounted and bearingless unions, however, coolant pressure creates a certain thrust load on the spindle.

Bearingless unions provide the machine tool designer with several advantages. First, eliminating bearings reduces cost while allowing an increase in maximum rpm. Second, since only a small rotor is directly attached to the spindle, there is no possibility for the union's housing to be a source of vibration. Third, without bearings the union is immune to side loading from, for example, too much tension in the coolant supply hose. Fourth, bearingless unions can be very small, ideal for applications with multiple, closely spaced spindles. However, bearingless unions must be installed in two pieces – the rotor and a small housing containing the non-rotating element and connection to the coolant supply. So, during installation, the micro-lapped seal faces are exposed and must be handled carefully.

Deublin 1116 Bearing-Supported Unions on Automotive Transfer Line.

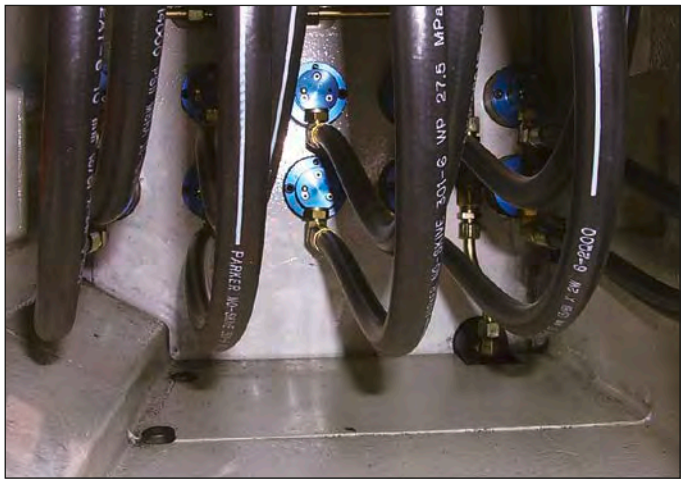

Deublin 1117 Bearingless Unions on Automotive Transfer Line.

Selecting the right Union for your Application

Which Deublin Seal Technology?

Deublin offers **five** different seal technologies, in order to provide the best solution for every machining application. Only Deublin can offer such flexibility to the machine tool designer.

"Closed Seal": As the name indicates, the seals stay closed with or without coolant pressure. Therefore, drain lines generally are not required. However, all rotary unions operate with a thin film of media between the seals. Over time, small, nearly invisible quantities of media can migrate across the seal faces. Proper venting provisions therefore should be made. Closed seal unions generally are less affected by extremely contaminated coolant than other designs. However, closed seal unions are suitable for dry running, according to model.

Pop-Off®: This kind of seal closes only when pressure is applied. When pressure is removed, the seal faces separate by a very small distance. This eliminates friction and seal wear during operation without coolant, and therefore allows unlimited "dry running" at high speeds. Pop-Off® designs should be considered when machining will occur with and without through-spindle coolant (TSC). Because the seals separate during tool changes, when coolant pressure is off, residual coolant in the supply hose and spindle can drain through the seal faces. Therefore, a Pop-Off® union always requires a downward-pointing drain line to direct such residual coolant into the sump. Also note that Pop-Off® unions are not intended for extended operation with pressurised dry air.

AutoSense®: This technology combines the best features of Pop-Off® and controlled leakage designs. Like Pop-Off® designs, AutoSense® seals close when coolant pressure is applied to contain the coolant fluid, and detach from each other without pressure thus allowing unlimited dry running. Like controlled leakage designs, AutoSense® seals handle pressurised dry air by creating a microscopic gap between the seal faces. AutoSense® unions handle coolant, MQL, and dry air, by sensing the kind of media and automatically changing seal operation in response. As with Pop-Off® seals, a drain line generally is required.

AutoSense Plus®: The latest in a series of Deublin innovations, this technology combines the best features of AutoSense® and Pop-Off® "Micro Stroke". The advantage of AutoSense Plus® is that it allows for the use of cutting oil in addition to coolant, MQL, and dry air.
Like the AutoSense® function, AutoSense Plus® senses the type of media and pressure, and automatically changes seal operation in response. The user is able to use all these media with a single connection to the union, and without the need for any additional intervention or control. As with AutoSense® and Pop-Off® seals, a drain line is generally required.

The table below summarizes the operation of each seal technology with different media.

<table>
<tr><th rowspan="2">Media</th><th colspan="4">Seal Technology</th></tr>
<tr><th>"Closed Seal"
(1005, 1101, 1108,
1116, 1117 series)</th><th>Pop-Off®
(1109, 1111,
1121 series)</th><th>AutoSense Plus®
(1114-1xx, 1124-1xx,
1154-1xx series)</th><th>AutoSense®
(1114, 1124, 1154,
1159 series)</th></tr>
<tr><td>No pressure</td><td rowspan="2">New enhanced dry run models available, contact Deublin</td><td colspan="3">Seals open automatically to prevent dry running</td></tr>
<tr><td>Compressed Air</td><td>Not recommended with rotation</td><td colspan="2" rowspan="2">Micro-gap between seals to prevent dry run damages</td></tr>
<tr><td>MQL</td><td colspan="3" rowspan="3">Seals are closed</td></tr>
<tr><td>Coolant
– water soluble –</td><td></td></tr>
<tr><td>Cutting Oil
– not water soluble –</td><td>Micro-gap, contact Deublin</td></tr>
</table>

Deublin engineers can help you choose the best technology for your application.

Mounting Tolerances

The interface between spindle and union must be manufactured to precise tolerance to ensure accurate, vibration-free operation. Bearingless unions and rotor-mounted, bearing-supported unions require the spindle end to be machined according to the following dimensions and tolerances:

Table shows reference data:
Please refer to the dimensions on the individual drawing when dimensioning the spindle.

Rotor Connection			Rotor Pilot		Spindle End			Tightening Torque
A	F	H	I	M	X	Y	Z	
5/8-18 UNF	9/16"	15/16"	0.6555" / 0.6553"	3/16"	0.6560" / 0.6556"	9/32"	13/16"	35 Nm
5/8-18 UNF	9/16"	15/16"	0.6249" / 0.6246"	3/32"	0.6254" / 0.6250"	3/16"	9/16"	35 Nm
M16 x 1.5	11	24	17.993 / 17.988	5	18.000 / 17.995	8.5	17	35 Nm
M16 x 1.5	11	24	16.025 / 16.020	5	16.037 / 16.027	7	17	35 Nm
M14 x 1.5	12	24	14.494 / 14.486	5	14.508 / 14.500	7	18	25 Nm
M12 x 1.25	11	24	13.994 / 13.989	5	14.005 / 14.000	7	17	15 Nm
M12 x 1 / M12 x 1.25	13	15	12.994 / 12.989	6	13.005 / 13.000	9	23	15 Nm
M10 x 1	11	17	10.994 / 10.989	3	11.008 / 11.000	5.2	15	10 Nm
M8 x 1	12.5	15	8.995 / 8.991	3.5	9.006 / 9.000	6	18	4 Nm

All dimensions in millimetres unless otherwise indicated.

Spindle End

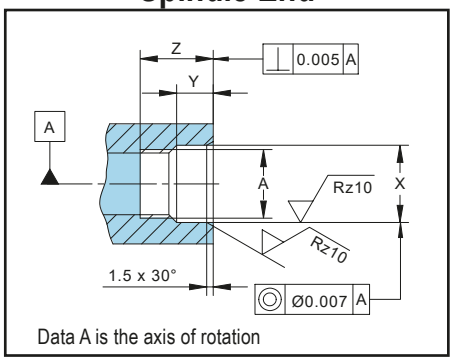

Rotor End

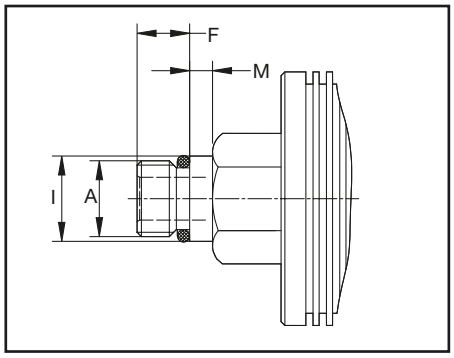

Installed Rotor

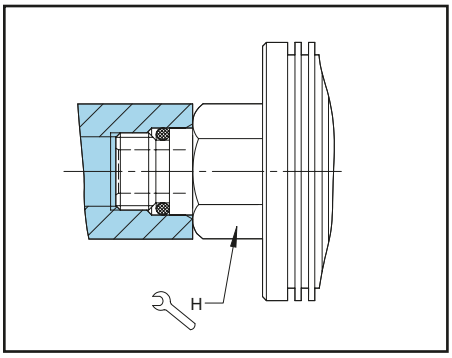

Bore-mounted, bearing-supported unions require one of the following two interfaces:

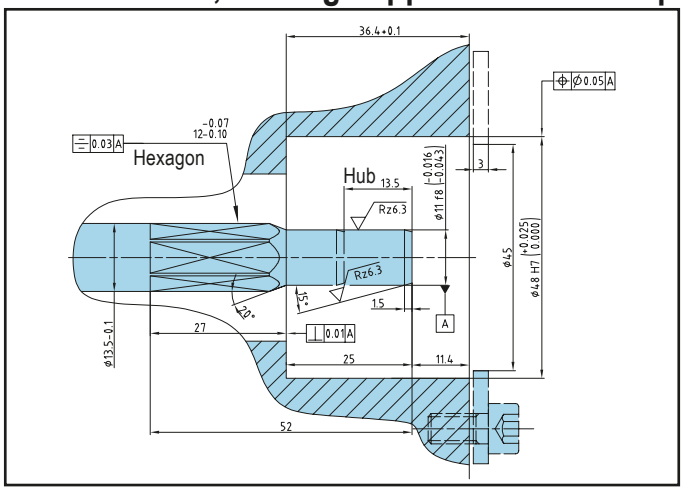

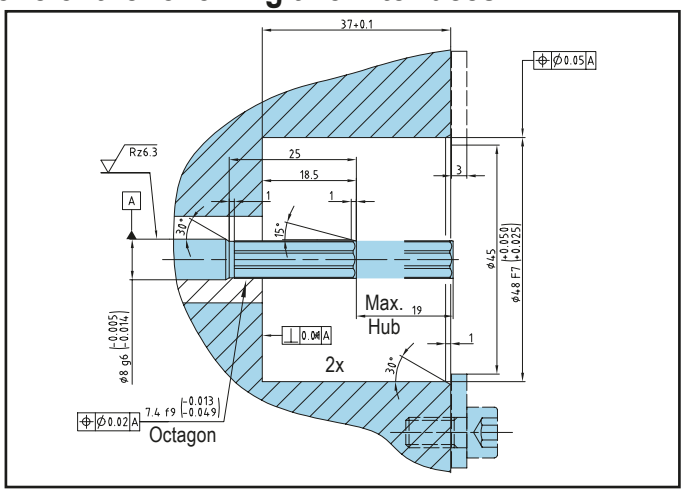

Drain and supply hose connections

Drain Connections

All unions, even closed-seal designs, can experience migration of minimal amounts of media across the seal faces. Such media migration keeps the seals well lubricated and avoids the permanent seal damage that comes from dry running. In addition, even the best unions eventually will need replacement. Therefore, the machine tool designer should provide adequate drainage to prevent costly spindle damage.

Deublin designs are very advanced, but even Deublin must obey the law of gravity! Therefore, it is critical that all drainage hoses and paths slope downward continuously, as shown in the diagrams below.

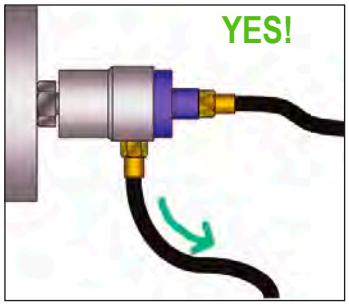

Drain hose always slopes downward

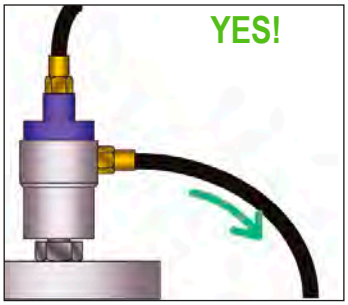

Drain hose always slopes downward

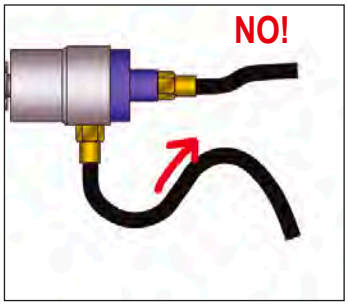

Part of drain hose slopes up

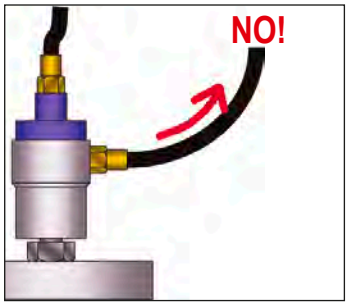

Drain hose slopes up from union

Supply Connection

Deublin Pop-Off®, AutoSense®, and “All-Media” unions offer unlimited “dry running” at high speeds. By allowing the seal faces to separate when coolant pressure is removed, seal wear during unpressurised operation is completely eliminated. One consequence is that the seals separate during tool changes, allowing residual coolant in the supply hose and spindle to drain through the seal faces. Careful orientation of the coolant supply hose can dramatically reduce this effect, as shown in the diagrams below.

Supply Hose Slopes Down from Union

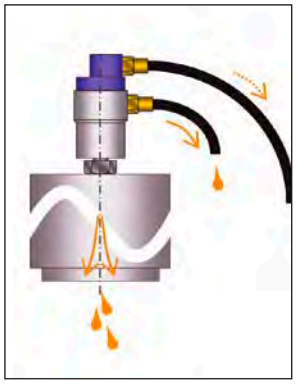

Tool change with vertical spindle

When the supply line runs down from the rotary union, any coolant between union and control valve will remain in the hose during tool change. This reduces the amount of drainage from both the spindle nose and the union drain line.

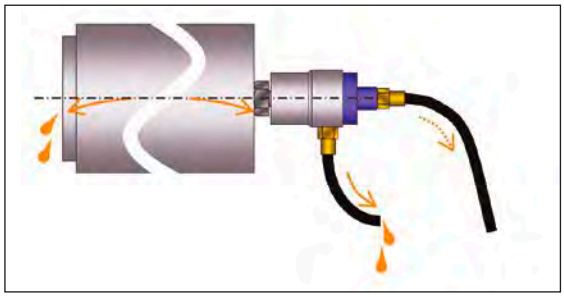

Tool change with horizontal spindle

Supply Hose Slopes Up from Union

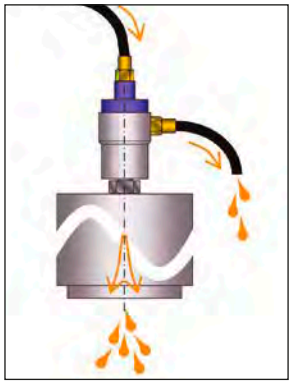

Tool change with vertical spindle

When the supply line runs up from the rotary union, any coolant between union and control valve will flow down during tool change. This increases the amount of drainage from both the spindle nose and the union drain line.

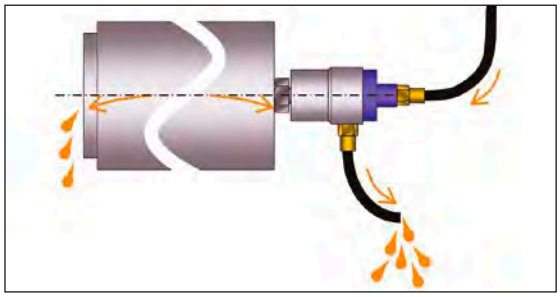

Tool change with horizontal spindle

Installation Techniques

Installing a Deublin Rotating Union is as easy as 1-2-3. For maximum life and reliability, maintenance engineers and service technicians need only to follow a few simple rules.

1. For bearing-supported, rotor-mounted unions, connect both supply and drain hoses to the union before mounting the union on the spindle. Otherwise, bearings in the union may become brinnelled or galled when the hose connections are tightened.
2. Clean thoroughly the mounting surfaces of the spindle before mounting the union. The spindle pilot must be clean, with no chips, no burrs, and no dents. Otherwise, the union may exhibit runout and vibrate during rotation.
3. Make sure the drain hose runs downward continuously, with no “roller coaster” rises that could prevent proper drainage. If the spindle is horizontal, make sure that the union’s drain hole is at 6 o’clock, pointing directly down. Deublin unions can do many things, but they can’t break the law of gravity!

Following are examples of correct and incorrect installations, with an explanation of what is correct or incorrect about each example.

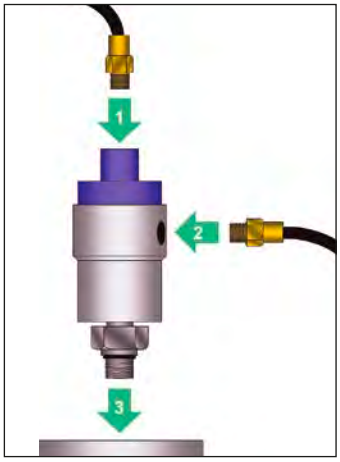

Examples of CORRECT Installations

RIGHT: Elbow fitting is used to avoid a tight bend in supply hose. Drain hose slopes downward.

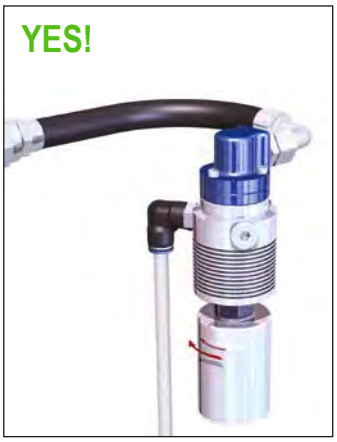

RIGHT: Flexible hose between rigid supply pipe and union. Drain hose runs straight down.

RIGHT: Flexible hose between rigid supply pipe and union. Drain hose runs straight down.

RIGHT: Elbow prevents excessive side load on bearings when supply hose is pressurized.

Examples of INCORRECT Installations

WRONG: Drain line points up, which can flood the union’s bearings.

WRONG: Union points up. Coolant contaminants will collect at the bottom and interfere with proper sealing.

WRONG: Union housing is rigidly attached to the spindle. Without 100 % perfect alignment, this creates a side load leading to early bearing failure.

WRONG: Bend in supply hose is too tight. When pressurised, the supply hose may create a large side load on the union’s bearings.

Coolant Filtration and Maintenance

Deublin unions are designed to handle the various coolant contaminants found in most manufacturing facilities. To ensure long union life and maximum productivity, however, coolant filtration should conform to ISO 4406:2017 Code 17/15/12, SAE 749 Class 5, or NAS 1638 Class 6, with a maximum particle size of 60 microns. For comparison, pumps (both fixed piston and variable volume) such as those used in coolant systems typically require ISO 4406:2017 Code 16/14/11 or better – in other words, half as much contamination as Deublin.

Only pure water should be used to make up for coolant evaporation. Calcium and magnesium salts in most tap water shorten coolant life, by depleting the chemicals in the coolant, by breaking down the water-oil emulsion, and by encouraging bacterial growth. These salts also can cause residue to build up inside the rotary union, leading to premature failure. One rule of thumb is that each additional "grain of hardness" (equivalent to 17 ppm or 17 mg/l of calcium carbonate) increases your annual coolant consumption by one percent. Proper coolant maintenance also prolongs tool life and improves the surface finish of your parts.

Unacceptable
(ISO 21/19/17 at 100x)

Acceptable
(ISO 16/14/11 at 100x)

ISO 4406:2017 Code 17/15/12	
Particle size (µm)	Particle per 100 ml
4 – 6	≤ 130,000
6 – 14	≤ 32,000
14 – 60	≤ 4,000

NAS 1638 Class 6	
Particle size (µm)	Particle per 100 ml
5 – 15	≤ 64,000
15 – 25	≤ 11,400
25 – 50	≤ 2,025
50 – 60	≤ 360

SAE 749-1963 Class 5	
Particle size (µm)	Particle per 100 ml
5 – 10	≤ 87,000
15 – 25	≤ 21,400
25 – 50	≤ 3,130
50 – 60	≤ 430

The larger the amount of particles in the media, the higher the wear rate of the rotary union. The residual contamination load should be at a maximum of 100 mg/L respectively at a maximum of 50 mg/L when processing aluminum.

Thread Equivalence

Parallel or "straight" threads are indicated in this catalog by the symbol "G". British Standard Parallel threads are known by several other names in different parts of the world. Common symbols for this thread style include: BSP, BSPP, BSSPI, BSPF, BSPG, PF, Rp, and G. British Standard parallel threads also may be referred to as British Gas, British Pipe Parallel or Parallel Fastening Thread. The reference standards are described in ISO 228/1 and JIS B0202.

American Standard Unified threads, indicated by UN or UNF, also are parallel. However, they are not the same as and do not mate with G threads, since the thread angle and shape are different.

The following examples are equivalent parallel threads:
G ¼
G ¼ cyl
PF ¼
R ¼ Tr
¼ BSP
Rp ¼

Tapered threads are indicated in this catalog by the symbols "PT" and "NPT". British Standard Taper threads are known by several other names, including: BSPT, BSPTr, PS, PT, R, and Rc. British Standard taper threads also may be referred to as Pipe Taper or Conical Thread. The reference standards are described in ISO 7/1 and JIS B0203.

American Standard NPT threads are also tapered, but not the same as PT threads. Both the thread angle and shape are different, so mating NPT with PT may not create a reliable seal.

The following examples are equivalent tapered threads:
R ¼ keg
G ¼ co
PT ¼
R ¼
Rc ¼
¼ BSPT

DEUBLIN

1005 Series "Closed Seal" Rotary Unions for Continuous Coolant Service

- Single passage for coolant or MQL
- Closed seals for transfer line and similar applications
- Full-flow design has no obstructions to trap swarf or debris
- Bearing-supported with threaded rotor for easy installation
- Labyrinth system and large vents to protect ball bearings
- Balanced mechanical seals made from silicon carbide for long life even under difficult operating conditions
- Anodized housing and stainless steel rotor resist corrosion

Operating Data

Media	Water-based Coolant MQL (oil mist) up to 10 bar (145 psi)	
Filtration	ISO 4406:2017 Class 17/15/12, max. 60 micron	
Max. Speed	15,000 min^{-1}	15,000 rpm
Max. Pressure	105 bar	1,523 psi
Max. Flow	6.7 l/min	1.8 gpm
Max. Temperature	71 °C	160 °F

DO NOT RUN DRY

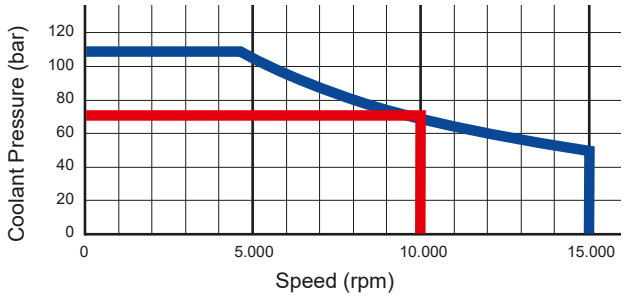

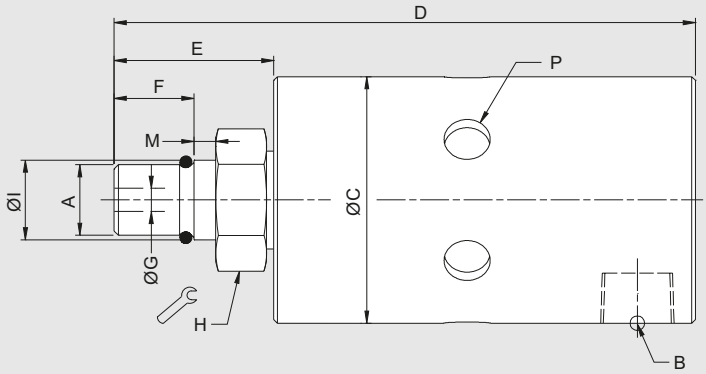

Other 1005 models are available for use with oil or dry air. Please refer to the Deublin Engineering Catalog.

	Ordering Number	B Supply Connection	C Overall Diameter	D Overall Length	P Vent Size Ø (6 x 60°)	A Rotor Connection	E Rotor Length	F Thread Length	G Bore Diameter	H Across Flats	I Pilot Diameter	M Pilot Length
R.	1005-704-434*	⅛ NPT	34	80	3 x Rp ⅛	M10 x 1 RH	22	11	3.4	17	10.994 10.989	5
Radial	1005-402-401	⅛ NPT	34	80	6.4	M10 x 1 RH	22	11	3.2	17	10.994 10.989	3
	1005-402-448	⅛ NPT	34	80	6.4	M10 x 1 LH	22	11	3.2	17	10.994 10.989	3

* Also allowed for hydraulics, compressed air and defined dry run cycles. For further information please contact Deublin.

DEUBLIN

1101 Series "Closed Seal" Rotary Unions for Coolant Service

- Single passage for coolant or MQL
- Dry-running cycles and compressed air applications under rotation possible depending on the model (see *, **)
- Closed seals for transfer line and similar applications
- Full-flow design has no obstructions to trap swarf or debris
- Bearing-supported with threaded rotor for easy installation
- Labyrinth system and large vents to protect ball bearings
- Balanced mechanical seals made from silicon carbide for long life even under difficult operating conditions
- Anodized aluminum components resist corrosion

Operating Data

Media	Water-based Coolant MQL (oil mist) up to 10 bar (145 psi)	
Filtration	ISO 4406:2017 Class 17/15/12, max. 60 micron	
Max. Speed	15,000 min^{-1}	15,000 rpm
Max. Pressure	105 bar	1,523 psi
Max. Flow	20 l/min	5.3 gpm
Max. Temperature	71 °C	160 °F

DO NOT RUN DRY

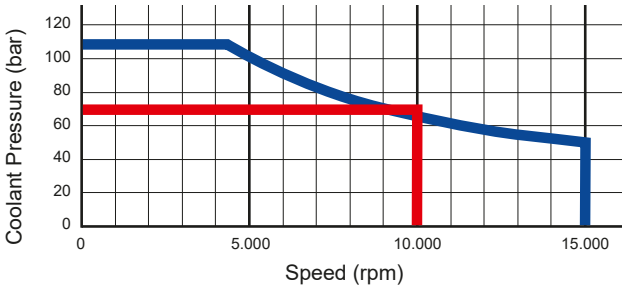

Axial Connection

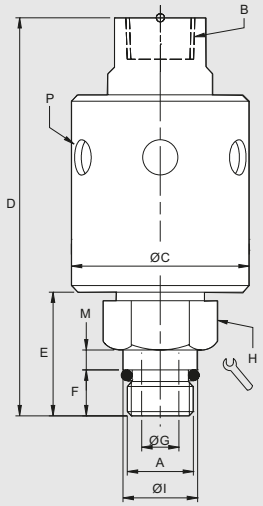

Radial Connection

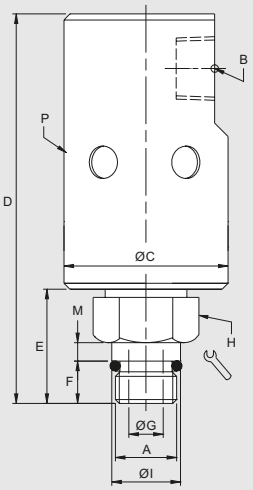

Axial / Radial Connection

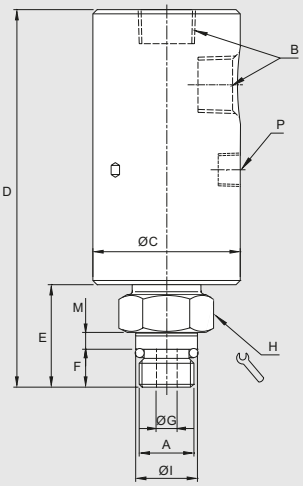

	Ordering Number	B Supply Connection	C Overall Diameter	D Overall Length	P Vent Size Ø (6 x 60°)	A Rotor Connection	E Rotor Length	F Thread Length	G Bore Diameter	H Across Flats	I Pilot Diameter	M Pilot Length
Radial	1101-265-343**	G ¼	43	95	3 x R ⅛	M16 x 1.5 LH	30	11	6	24	17.993 / 17.988	5
Radial	1101-265-644**	G ¼	43	91	3 x R ⅛	Flange TK-Ø 21	26	14.5	6	4 x M4	Ø 30.01 H6	8
Radial	1101-632-343	Rc ⅜	43	103	3 x Rc ⅛	M16 x 1.5 LH	30	11	6	24	17.993 / 17.988	5
A+R	1101-202-651*	Rc ⅜	43	110	3 x Rc ⅛	M16 x 1.5 LH	33	11	6	24	17.993 / 17.988	5
A+R	1101-202-661*	Rc ⅜	43	110	3 x Rc ⅛	M12 x 1.25 LH	30	11	6	34	13.994 / 13.989	5
Axial	1101-235-343	⅜ NPT	43	96	9	M16 x 1.5 LH	30	11	6	24	17.993 / 17.988	5
Axial	1101-235-238	⅜ NPT	43	100	9	⅝-18 UNF LF	34	14.3	6	24	16.649 / 16.464	5
Axial	1101-359-343	G ⅜	43	96	9	M16 x 1.5 LH	30	11	6	24	17.993 / 17.988	5
R.	1101-195-343	G ⅜	43	102	9	M16 x 1.5 LH	30	11	6	24	17.993 / 17.988	5

* Also allowed for compressed air and defined dry run cycles with reduced operating data.
** Also allowed for operation with hydraulic, compressed air and defined dry run cycles with reduced operating data. Please see page 21 multi-media application.

DEUBLIN

1116 Series "Closed Seal" Rotary Unions for Coolant Service

- Single passage for coolant or MQL
- Dry-running cycles and compressed air applications under rotation possible depending on the model (see *, **)
- Closed seals for transfer line and similar applications
- Full-flow design has no obstructions to trap swarf or debris
- Bearing-supported with threaded rotor for easy installation
- Labyrinth system and large vents to protect ball bearings
- Balanced mechanical seals made from silicon carbide for long life even under difficult operating conditions
- Anodized aluminum housing resists corrosion

Operating Data

Media	Water-based Coolant MQL (oil mist) up to 10 bar (145 psi)	
Filtration	ISO 4406:2017 Class 17/15/12, max. 60 micron	
Max. Speed	12,000 min^{-1}	12,000 rpm
Max. Pressure	70 bar	1,015 psi
Max. Flow	82 l/min	21.6 gpm
Max. Temperature	71 °C	160 °F

DO NOT RUN DRY

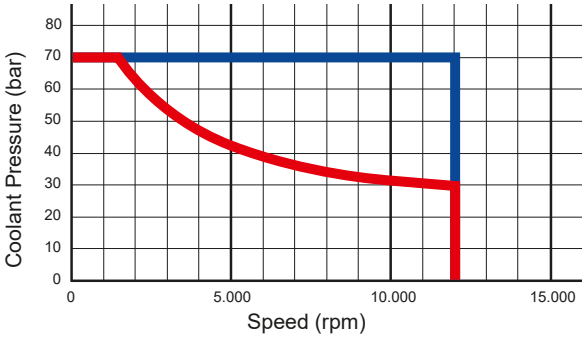

Axial Connection

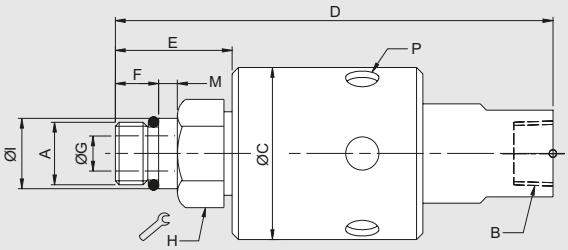

Radial Connection

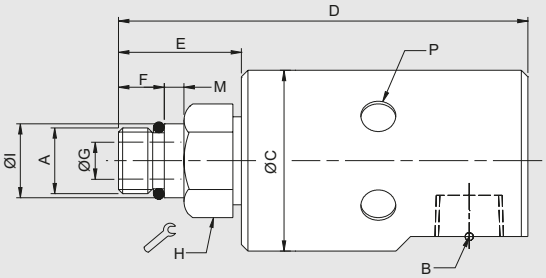

	Ordering Number	B Supply Connection	C Overall Diameter	D Overall Length	P Vent Size Ø (6 x 60°)	A Rotor Connection	E Rotor Length	F Thread Length	G Bore Diameter	H Across Flats	I Pilot Diameter	M Pilot Length
Axial	1116-048-059***	¼ NPT	44	115	9	⅝-18 UNF LH	33	14	9	24	16.649 / 16.644	5
Axial	1116-048-463***	¼ NPT	44	112	9	M16 x 1.5 LH	30	11	9	24	17.993 / 17.988	5
Axial	1116-063-463*	G ⅜	44	112	9	M16 x 1.5 LH	30	11	9	24	17.993 / 17.988	5
Axial	1116-319-248	Ø25 Counter Bore	44	105	3 x 9.5	⅜ NPT	30	16	–	24	–	–
Axial	1116-485-463***	G ¼	44	112	9	M16 x 1.5 LH	30	11	9	24	17.993 / 17.988	5
Axial	1116-600-059	⅜ NPT	44	115	9	⅝-18 UNF LH	33	14	9	24	16.650 / 16.637	5
Axial	1116-600-463	⅜ NPT	44	112	9	M16 x 1.5 LH	30	11	9	24	17.994 / 17.989	5
Axial	1116-610-463	G ⅜	44	112	9	M16 x 1.5 LH	30	11	9	24	17.993 / 17.988	5
Radial	1116-090-059	⅜ NPT	44	105	9	⅝-18 UNF LH	33	14	9	24	16.649 / 16.644	5
Radial	1116-090-463	⅜ NPT	44	102	9	M16 x 1.5 LH	30	11	9	24	17.993 / 17.988	5
Radial	1116-516-463*	G ⅜	44	102	9	M16 x 1.5 LH	29	11	9	24	17.993 / 17.988	5
Radial	1116-555-463	G ⅜	44	102	9	M16 x 1.5 LH	29	11	9	24	17.993 / 17.988	5
R.	1116-987-463**	G ⅜	44	102	9	M16 x 1.5 LH	30	11	9	24	17.993 / 17.988	5

* Also allowed for compressed air and defined dry run cycles with reduced operating data.
** Also allowed for operation with hydraulic, compressed air and defined dry run cycles with reduced operating data. Please see page 21 multi-media application.
*** For selection of unions with ¼ connection please contact Deublin engineering for operating data.
For further information please contact Deublin.

DEUBLIN

1108 Series "Closed Seal" Bore-Mounted Rotary Unions for Coolant Service

- Single passage for coolant or MQL
- Dry-running cycles and compressed air applications under rotation possible depending on the model (see *)
- Closed seals
- Accepts up to 19 mm of draw bar movement
- Full-flow design has no obstructions to trap swarf or debris
- Labyrinth system and large vents to protect ball bearing
- Balanced mechanical seals made from silicon carbide for long life even under difficult operating conditions
- Stainless steel housing and rotor
- Anodized aluminum end cap

Operating Data

Media	Water-based Coolant MQL (oil mist) up to 10 bar (145 psi)	
Filtration	ISO 4406:2017 Class 17/15/12, max. 60 micron	
Max. Speed	24,000 min^{-1}	24,000 rpm
Max. Pressure	see graph/table	
Max. Flow	24.3 l/min	6.4 gpm
Max. Temperature	71 °C	160 °F

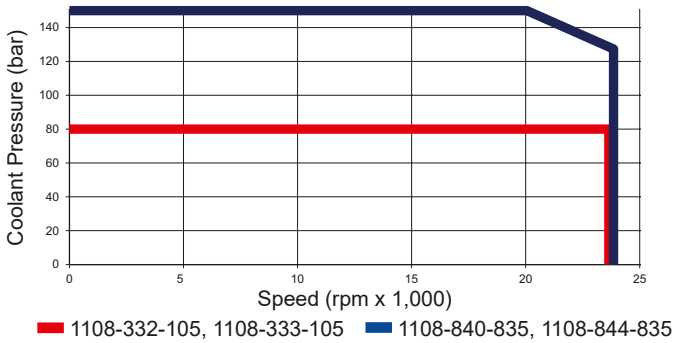

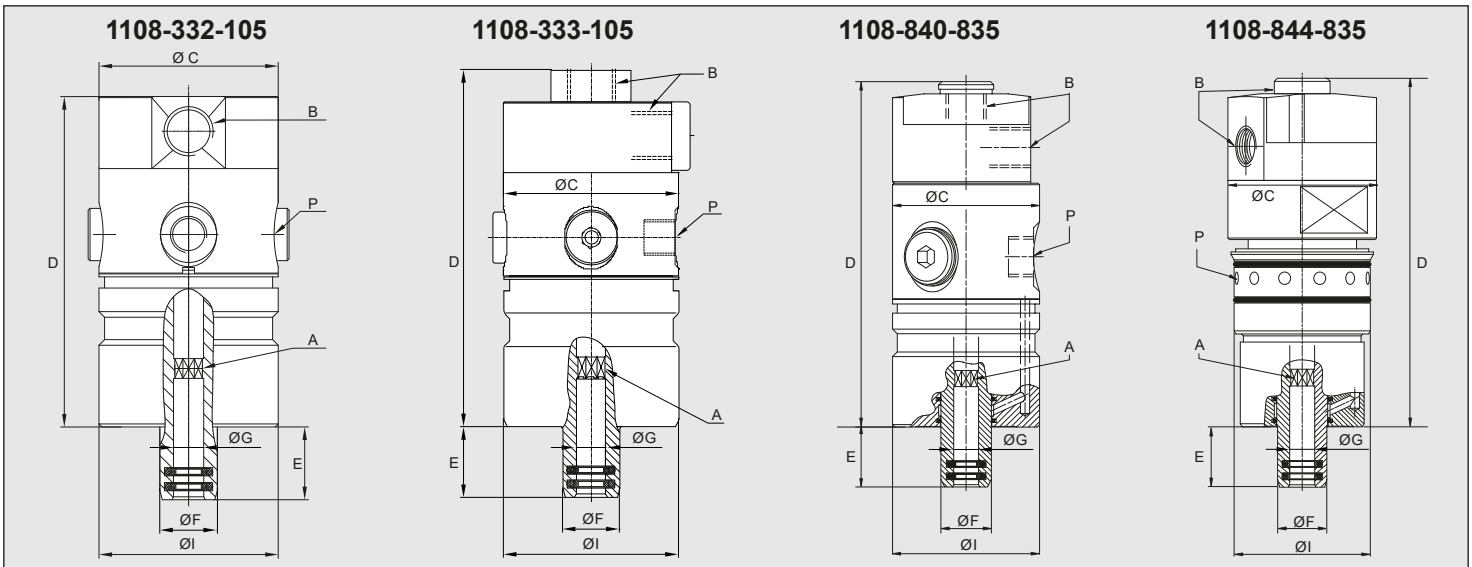

	Ordering Number	B Supply Connection	C Overall Diameter	D Housing Length	P Vent Size ~~Ø (3 x 120°)~~	A Rotor Connection	E Rotor Length	F Rotor Overall Diameter	G Bore Diameter	I Pilot Diameter	Maximum Speed (rpm)	Max, Pressure (bar)
	1108-332-105*	G ¼ Radial	48	88.5	G ⅛ (4x90°)	Octagon 7.4 D10	19.5	15.4	8.1 F9	48 h7	24,000	80
	1108-333-105*	G ¼ Axial & Radial	48	98	G ⅛ (4x90°)	Octagon 7.4 D10	19.5	15.4	8.1 F9	48 h7	24,000	80
	1108-840-835	G ¼ Axial & Radial	48	112	G ¼ (3x120°)	Octagon 7.4 D10	19.5	15.9	8.1 F9	48 g6	24,000	150
	1108-844-835	G ¼ Axial & Radial	48	113	12 x Ø 4	Octagon 7.4 D10	19.5	15.9	8.1 F9	44.000 43.959	24,000	150

* Also allowed for compressed air and defined dry run cycles with reduced operating data. For further information please contact Deublin.

DEUBLIN

1109 Series Pop-Off®
Rotor-Mounted Rotary Unions
for Coolant Service with unlimited Dry Running

- Single passage for coolant or MQL
- Pop-Off® technology allows unlimited dry running without media pressure
- Full-flow design has no obstructions to trap swarf or debris
- Bearing-supported with threaded rotor for easy installation
- Labyrinth system and large vents to protect ball bearings
- Balanced mechanical seals made from silicon carbide for long life even under difficult operating conditions
- Aluminum housing, endcap anodized resists corrosion

Operating Data

Media	Water-based Coolant MQL (oil mist) up to 10 bar (145 psi)		
Filtration	ISO 4406:2017 Class 17/15/12, max. 60 micron		
Max. Speed	20,000 min^{-1}	20,000 rpm	
Max. Pressure	see chart		
Max. Flow	82 l/min	21.6 gpm	Standard
	24.3 l/min	6.4 gpm	High Pressure (HP)
Max. Temperature	71 °C	160 °F	

NO COMPRESSED AIR WITH ROTATION

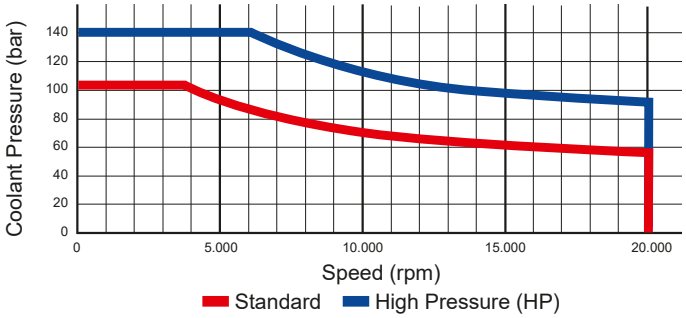

Axial Connection

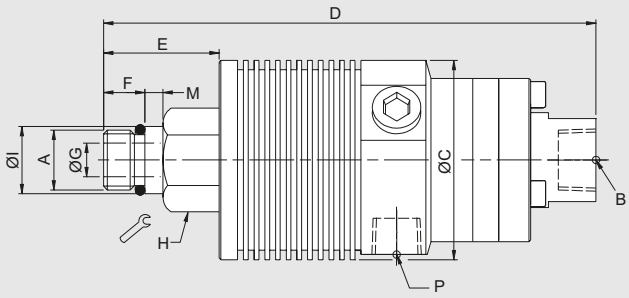

Radial Connection

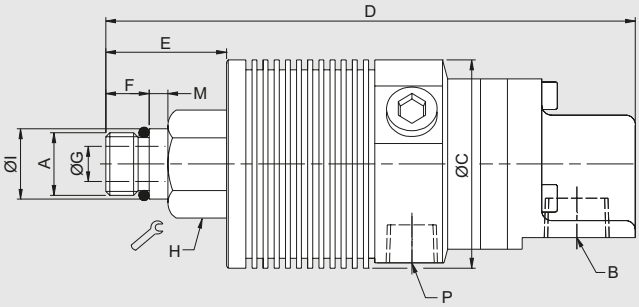

	Ordering Number	B Supply Connection	C Overall Diameter	D Overall Length	P Drain Size Ø (3 x 120°)	A Rotor Connection	E Rotor Length	F Thread Length	G Bore Diameter	H Across Flats	I Pilot Diameter	M Pilot Length
Standard	1109-010-165	⅜ NPT Radial	53	135	¼ NPT	⅝-18 UNF LH	30	11	9	24	16.649 / 16.645	5
Standard	1109-011-165	⅜ NPT Axial	53	129	¼ NPT	⅝-18 UNF LH	30	11	9	24	16.649 / 16.645	5
Standard	1109-020-188	G ⅜ Radial	53	135	G ¼	M16 x 1.5 LH	30	11	9	24	17.993 / 17.988	5
Standard	1109-021-188	G ⅜ Axial	53	129	G ¼	M16 x 1.5 LH	30	11	9	24	17.993 / 17.988	5
Standard	1109-040-188	⅜ PT Radial	53	135	¼ PT	M16 x 1.5 LH	30	11	9	24	17.993 / 17.988	5
Standard	1109-041-188	Rc ⅜ Axial	53	129	Rc ¼	M16 x 1.5 LH	30	11	9	24	17.993 / 17.988	5
HP	1109-023-212	G ¼ Radial	53	135	G ¼	M16 x 1.5 LH	30	11	9	24	17.993 / 17.988	5
HP	1109-024-212	G ¼ Axial	53	129	G ¼	M16 x 1.5 LH	30	11	9	24	17.993 / 17.988	5
HP	1109-043-212	Rc ¼ Radial	53	135	Rc ¼	M16 x 1.5 LH	30	11	9	24	17.993 / 17.988	5
HP	1109-044-212	Rc ¼ Axial	53	129	Rc ¼	M16 x 1.5 LH	30	11	9	24	17.993 / 17.988	5

DEUBLIN

1109 and 1111 Series Pop-Off® Bore-Mounted Rotary Unions for Coolant Service with unlimited Dry Running

- Single passage for coolant or MQL
- Pop-Off® technology allows unlimited dry running without media pressure
- Accepts up to 19 mm of axial drawbar movement
- Full-flow design has no obstructions to trap swarf or debris
- Bore-mounted design for easy installation
- Labyrinth system and large vents to protect ball bearings
- Balanced mechanical seals made from silicon carbide for long life even under difficult operating conditions
- Housing and rotor of stainless steel
- Anodized aluminum resist corrosion

Operating Data

Media	Water-based Coolant MQL (oil mist) up to 10 bar (145 psi)	
Filtration	ISO 4406:2017 Class 17/15/12, max. 60 micron	
Max. Speed	see chart/table	
Max. Pressure	see chart/table	
Max. Flow		
1109-842-730	82 l/min	21.6 gpm
1109-710-717	82 l/min	21.6 gpm
1109-92x-930	24.3 l/min	6.4 gpm
1109-8x0-835	24.3 l/min	6.4 gpm
Max. Temperature	71 °C	160 °F

NO COMPRESSED AIR WITH ROTATION

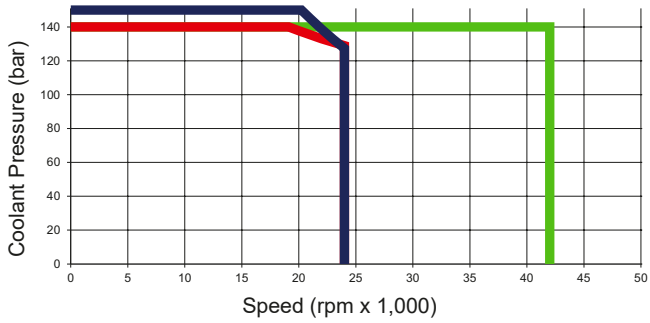

1109-710-717, 1109-710-730, 1111-335-105, 1111-002-105
1109-840-835, 1109-842-730
1109-926-930

Axial Connection
(1109-710-717 shown)

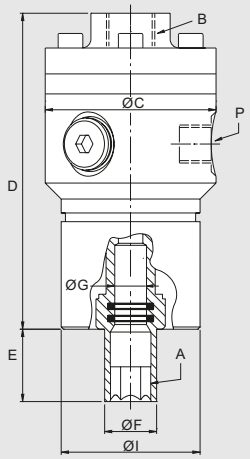

Radial Connection

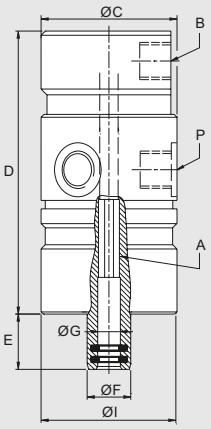

Axial / Radial Connection

Patented

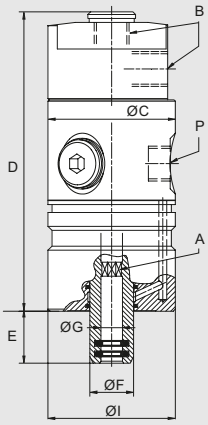

	Ordering Number	B Supply Connection	C Overall Diameter	D Housing Length	P Vent Size Ø (3 x 120°)	A Rotor Connection	E Rotor Length	F Rotor Overall Diameter	G Bore Diameter	I Pilot Diameter	Maximum Speed (rpm)	Max. Pressure (bar)
	1111-002-105*	G ¼ Radial	48	88.5	G ⅛ (4x90°)	Octagon 7.4 D10	19.5	15.4	8.1 F9	48 h7	24,000	140
	1111-335-105*	G ¼ Axial & Radial	48	98	G ⅛ (4x90°)	Octagon 7.4 D10	19.5	15.4	8.1 F9	48 h7	24,000	140
	1109-710-717	G ⅜ Axial	59	109	G ¼	Hexagon 12 D10	25.0	18.0	11 H7	48 g6	24,000	140
	1109-710-730	G ⅜ Axial	59	97	G ¼	Octagon 9.25 D10	19.5	20.0	10.1+0.06	48 g6	24,000	140
	1109-840-835	G ¼ Axial & Radial	48	112	G ¼	Octagon 7.4 D10	19.5	15.9	8.1 F9	48 g6	24,000	150
	1109-842-730	G ⅜ Axial & Radial	48	116	G ¼	Octagon 9.25 D10	19.5	16.0	10 F9	48 g6	24,000	150
	1109-926-930	G ¼ Radial	48	93	G ¼	Octagon 7.4 D10	19.5	15.4	8.1 F9	48 h7	42,000	140

* Ultra-short (0.1 mm) pop-off stroke restricts drainage of residual coolant during tool change.

DEUBLIN

1114 Series AutoSense®
Rotor-Mounted Rotary Unions for Coolant and Air Service and unlimited Dry Running

- Single passage for both coolant and dry air
- Patented AutoSense® technology automatically changes between closed seals and controlled leakage operation in response to the kind of media
- Threaded rotor for easy installation
- Full-flow design has no obstructions to trap swarf or debris
- Labyrinth system and large vents to protect bearings
- Balanced mechanical seals made from silicon carbide for long life even under difficult operating conditions
- Aluminum housing, endcap anodized resists corrosion

Operating Data

Media	Water-based Coolant MQL (oil mist) up to 10 bar (145 psi) Air up to 10 bar (145 psi)		
Filtration	ISO 4406:2017 Class 17/15/12, max. 60 micron		
Max. Speed	20,000 min^{-1}	20,000 rpm	
Max. Pressure	see chart		
Max. Flow	82 l/min	21.6 gpm	Standard
	24.3 l/min	6.4 gpm	High Pressure
Max. Temperature	71 °C	160 °F	

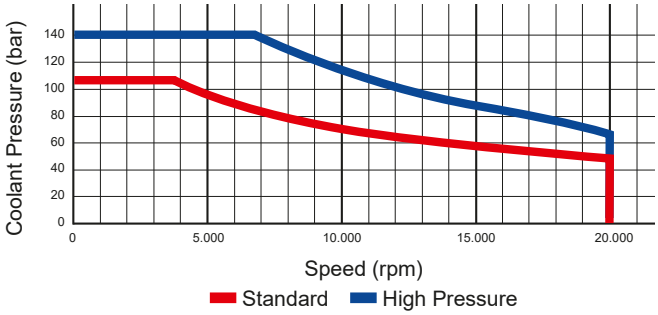

Axial Connection

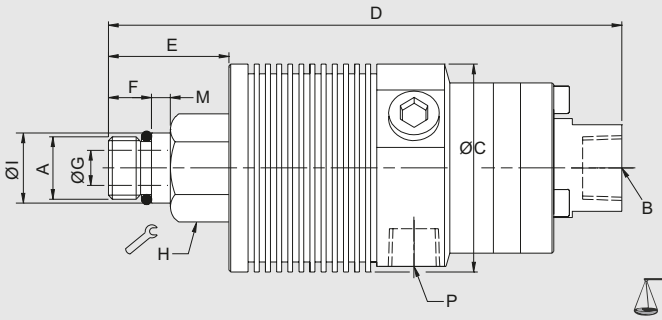

Radial Connection

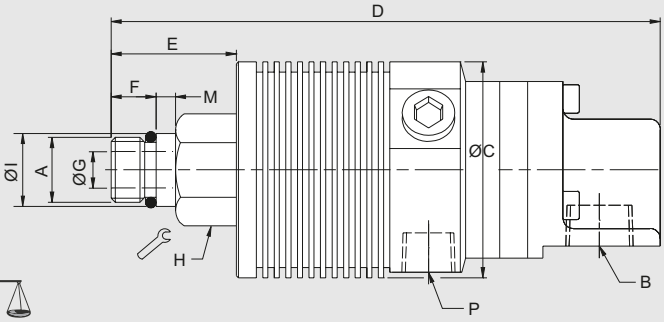

Patented

	Ordering Number	B Supply Connection	C Overall Diameter	D Overall Length	P Drain Size Ø (3 x 120°)	A Rotor Connection	E Rotor Length	F Thread Length	G Bore Diameter	H Across Flats	I Pilot Diameter	M Pilot Length
Standard	1114-010-165	⅜ NPT Radial	53	137	¼ NPT	⅝-18 UNF LH	30	11	9	24	16.649 / 16.464	5
	1114-011-165	⅜ NPT Axial	53	131	¼ NPT	⅝-18 UNF LH	30	11	9	24	16.649 / 16.464	5
	1114-020-188	G ⅜ Radial	53	137	G ¼	M16 x 1.5 LH	30	11	9	24	17.993 / 17.988	5
	1114-021-188	G ⅜ Axial	53	131	G ¼	M16 x 1.5 LH	30	11	9	24	17.993 / 17.988	5
	1114-040-188	⅜ PT Radial	53	137	¼ PT	M16 x 1.5 LH	30	11	9	24	17.993 / 17.988	5
	1114-041-188	Rc ⅜	53	131	Rc ¼	M16 x 1.5 LH	30	11	9	24	17.993 / 17.988	5
HP	1114-023-212	G ¼ Radial	53	137	G ¼	M16 x 1.5 LH	30	11	9	24	17.993 / 17.988	5
	1114-024-212	G ¼ Axial	53	131	G ¼	M16 x 1.5 LH	30	11	9	24	17.993 / 17.988	5

DEUBLIN

1114 Series AutoSense®
Bore-Mounted Rotary Unions for Coolant and Air Service and unlimited Dry Running

- Single passage for both coolant and dry air
- Patented AutoSense® technology automatically changes between closed seals and controlled leakage operation in response to the kind of media
- Bore-mounted design for easy installation
- Accepts up to 19 mm of axial drawbar movement
- Labyrinth system and large vents to protect ball bearings
- Full-flow design has no obstructions to trap swarf or debris
- Balanced mechanical seals made from silicon carbide for long life even under difficult operating conditions
- Anodized aluminum and stainless steel parts resist corrosion

Operating Data

Media	Water-based Coolant MQL (oil mist) up to 10 bar (145 psi) Air up to 10 bar (145 psi)	
Filtration	ISO 4406:2017 Class 17/15/12, max. 60 micron	
Max. Speed	see chart/table	
Max. Pressure	see chart/table	
Max. Flow		
1114-710-xxx	82 l/min	21.6 gpm
1114-842-730	82 l/min	21.6 gpm
1114-331-105	24.3 l/min	6.4 gpm
1114-92x-930	24.3 l/min	6.4 gpm
Max. Temperature	71 °C	160 °F

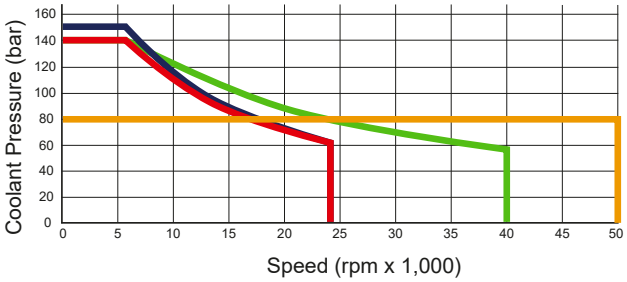

Axial Connection (1114-710-717 shown)

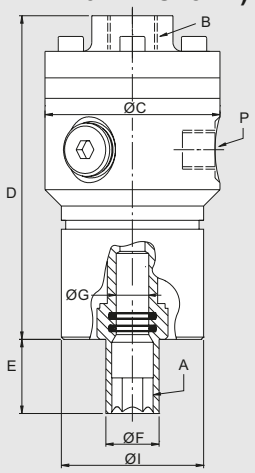

Radial Connection

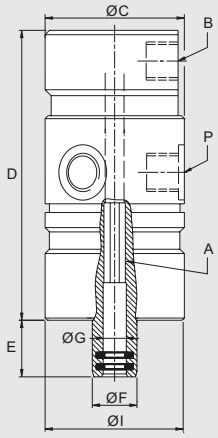

Patented

1114-842-730 shown

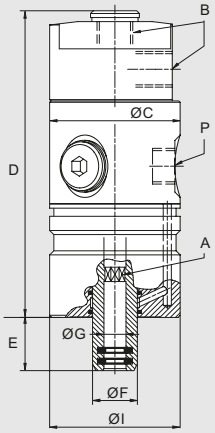

	Ordering Number	B Supply Connection	C Ø Overall	D Housing Length	P Drain Size Ø (3 x 120°)	A Rotor Connection	E Rotor Length	F Ø Rotor Overall	G Ø Bore	I Ø Pilot	Max. Speed (rpm)	Max. Pressure (bar)
	1114-331-105	G ¼ Radial	48	88.5	G ⅛ (4x90°)	Octagon 7.4 D10	19.5	15.4	8.1 F9	48 h7	24,000	140
	1114-335-105	G ¼ Axial & Radial	48	98	G ⅛ (4x90°)	Octagon 7.4 D10	19.5	15.4	8.1 F9	48 h7	24,000	140
	1114-710-717	G ⅜ Axial	59	111	G ¼	Hexagon 12 D10	25.0	18.0	11 H7	48 g6	24,000	140
	1114-842-730	G ⅜ Axial & Radial	48	120	G ¼	Octagon 9.25 D10	19.5	16.0	10 F9	48 g6	24,000	150
	1114-926-930	G ¼ Radial	48	95	G ¼	Octagon 7.4 D10	19.5	15.4	8.1 F9	48 h7	42,000	140
	1114-927-930	G ¼ Axial	48	95	G ¼	Octagon 7.4 D10	19.5	15.4	8.1 F9	48 h7	42,000	140
	1114-336-334	G ⅛ Axial & Radial	32	93	RP ⅛ (5x72°)	Hexagon 4.5 D10	11.0	11.5	5.1 H10	32 h7	50,000	80

DEUBLIN

Rotary Union AutoSense Plus®

- Single passage for “All-Media” application
- Patented AutoSense Plus® technology automatically changes between closed seals and controlled leakage operation in response to the kind of media und pressure
- Full-flow design has no obstructions to trap chips or debris
- Balanced mechanical seals made from silicon carbide for long life even under difficult operating conditions
- AutoSense Plus® technology can be integrated into bearing-supported and bearingless rotary unions

Operating Data

Media	Water-based Coolant up to 140 bar (2,031 psi) Cutting oil up to 140 bar (2,031 psi) MQL (oil mist) up to 10 bar (145 psi) Air up to 10 bar (145 psi)	
Filtration	ISO 4406:2017 Class 17/15/12, max. 60 micron	
Max. Speed	50,000 min^{-1}	50,000 rpm
Max. Pressure	150 bar	2,175 psi
Max. Flow	82 l/min	21.6 gpm
Max. Temperature	71 °C	160 °F

AutoSense Plus® is available in all Rotary Union versions

- Rotor-mounted union, bearing supported
- Bore-mounted union, bearing supported
- Bearingless union

1124-1270-022

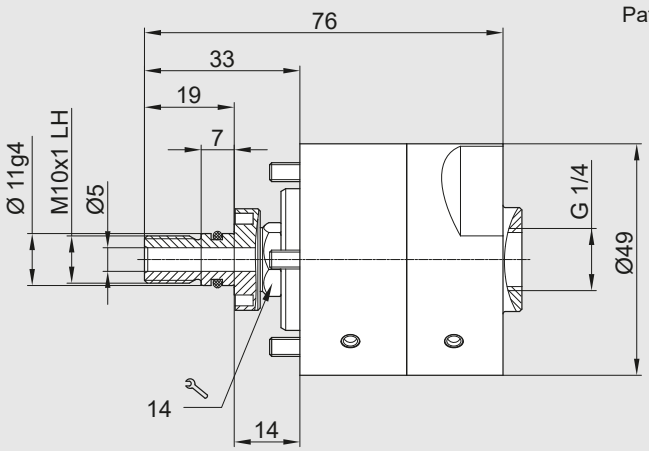

Patent Pending

1114-1335-105

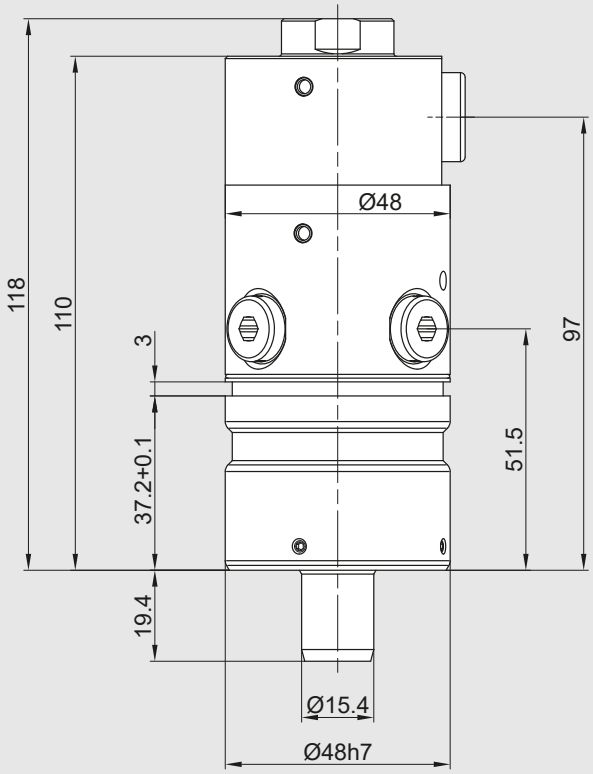

DEUBLIN

Rotary Union 1103 and 1113 series with SpindleShield®

- Single passage
- For all union designs, bore-mounted, rotor-mounted, bearingless
- For all seal technologies, AutoSense®, Pop-Off®, Closed Seal
- Patented technology warns the machine of leakage due to excessive seal wear with test function and media detection
- Wide operating voltage and temperature range
- Anodized aluminum housing resists corrosion
- CE-certified
- Optional available is a SpindleShield® model without cable

Operating Data

The Operating Data correspond to the respective basic models
(see catalog pages 15 to 19 and table below)

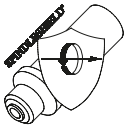

Leak Sensor Features

- Media detection water-based coolant
- Reverse polarity protection
- Output short circuit protection
- ESD protection
- Integrated leak sensor test function
- Less than 50 µA standby mode current
- Fail safe design

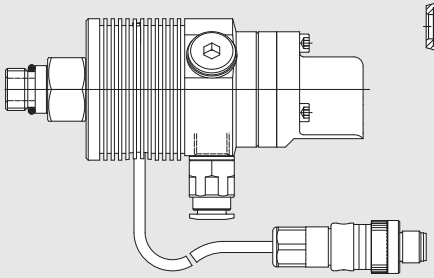

Available with free cable end

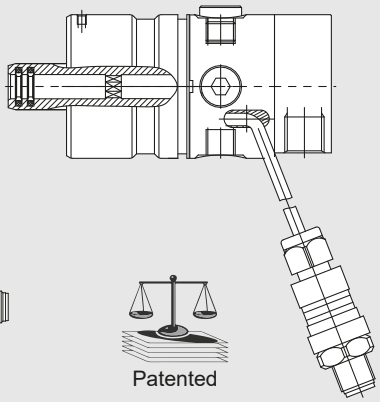

Patented

M12 connector male 4 positions A coded

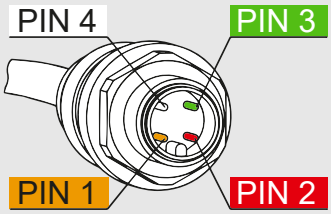

PIN 1: +24 VDC
PIN 2: Test
PIN 3: Ground
PIN 4: Signal

	Ordering number	Seal technology	Basic model dimensions same as	see catalog page
Rotor-mounted	1103-020-188	Pop-Off®	1109-020-188	15
	1103-021-188	Pop-Off®	1109-021-188	15
	1103-420-188	AutoSense®	1114-020-188	17
	1103-421-188	AutoSense®	1114-021-188	17
Bore-mounted	1103-335-105	Pop-Off®	1111-335-105	16
	1103-435-105	AutoSense®	1114-335-105	18
	1113-333-105	Closed Seal	1108-333-105	14
	1103-442-730	AutoSense®	1114-842-730	18
	1103-342-730	Pop-Off®	1109-842-730	16

	Parameter	Min	Max	Unit	Notes
Specification of Sensor	Operating voltage	15	28	V	direct current (DC)
	Operating temperature	-30	85	°C	
	ESD-protection on all 4 ports		±2	kV	Human body model (HBM)
	Maximum current		50	mA	At 28 V supply
	Leakage test function		Yes		Short circuit to system ground test of leakage function
	Signal Pin 4, output voltage Vout	14.2	27.2	V	Vout = Vin -0.8 V

Accessory Ordering Number

1103-WLSB
(Wireless Leak Sensor Box)

DEUBLIN

1005/1101/1116 Series Rotary Unions for Multi-Media-Application

- Single passage for clamping, unclamping, lubricating, cooling and sensoring
- Special design closed seals for multi-media-applications and dry run cycles
- All-purpose design; one model for various applications
- Full-flow design has no obstructions to trap swarf or debris
- Rotor-mounted design for easy installation
- Labyrinth system and large vents to protect ball bearings
- Anodized aluminum housing resists corrosion

Operating Data

Filtration	ISO 4406:2017 Class 17/15/12, max. 60 micron	
Max. Speed*	10,000 min^{-1}	10,000 rpm
Max. Pressure		
Hydraulic	70 bar	1,015 psi
Coolant	70 bar	1,015 psi
Lubricant	70 bar	1,015 psi
MQL	10 bar	145 psi
Compressed Air	6 bar	87 psi
Dry run	defined dry run cycles	
Max. Flow	Coolant see table	
Max. Temperature	71 °C	160 °F

* 1116 series: max. 3,500 rpm for compressed air and hydraulic service

DEFINED DRY RUN

MULTI-MEDIA-APPLICATION

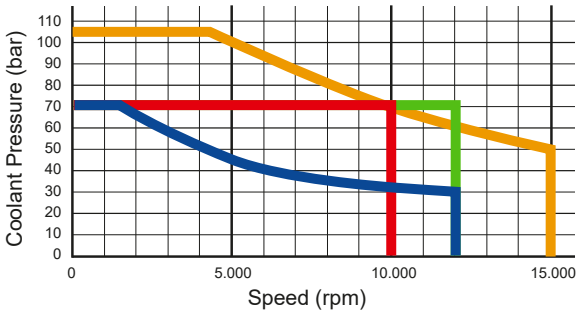

1101-265-644

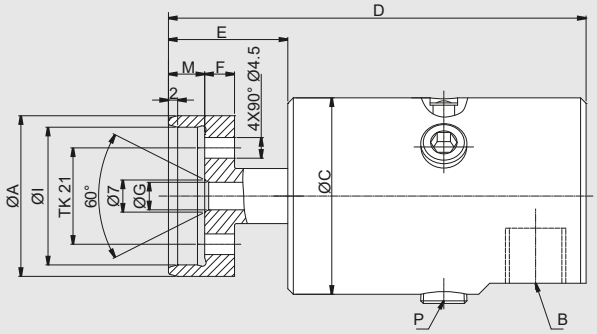

Radial Connection

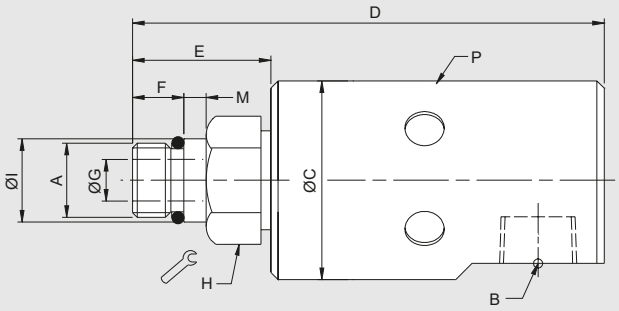

	Ordering Number	B Supply Connection	Flow Coolant l/min	D Overall Length	C Overall Diameter	P Drain Size Ø (6 x 60°)	A Rotor Connection	E Rotor Length	F Length	G Bore Diameter	H Across Flats	I Pilot Diameter	M Pilot Length
	1005-704-434	⅛ NPT Radial	11	80	34	3 x Rp ⅛	M10 x 1 RH	22	11	3.4	17	10.994 / 10.989	5
	1101-265-343	G ¼ Radial	20	95	43	3 x Rp ⅛	M16 x 1.5 LH	30	11	6	24	17.993 / 17.988	5
	1101-265-644	G ¼ Radial	20	91	43	3 x Rp ⅛	Flange 35 h8	26	6.5	6	4 x M4	30.01 H6	8
	1116-516-463*	G ⅜ Radial	82	102	44	6 x 8.5 closed	M16 x 1.5 LH	30	11	8.5	24	17.993 / 17.998	5
	1116-063-463*	G ⅜ Axial	82	112	44	6 x 8.5	M16 x 1.5 LH	30	11	9	24	17.993 / 17.998	5
	1116-987-463	G ⅜ Radial	82	102	44	6 x 8.5	M16 x 1.5 LH	30	11	8.5	24	17.993 / 17.998	5
	1101-202-651*	Rc ⅜	43	110	43	3 x Rc ⅛	M16 x 1.5 LH	33	11	6	24	17.993 / 17.988	5
	1101-202-661*	Rc ⅜	43	110	43	3 x Rc ⅛	M12 x 1.25 LH	30	11	6	34	13.994 / 13.989	5

* Not allowed for operation with hydraulic.

DEUBLIN

Rotary Unions Flange Design
Bore-Mounted for Various Media

- Single passage available with all sealing technologies
- Accepts up to 19 mm of drawbar movement
- Full-flow design has no obstructions to trap swarf or debris
- Labyrinth system and large vents to protect ball bearings
- Balanced mechanical seals made from silicon carbide for long life even under difficult operating conditions
- Anodized end cap and stainless steel housing and rotor resist corrosion
- Dry run capability depending on sealing technology and materials possible

Operating Data

Sealing Technology (depending on model)	AutoSense®, Closed Seal, Pop-Off®
Media (depending on model)	Coolant – water based; Cutting Oil Compressed Air up to 10 bar, up to 145 psi MQL (oil mist) up to 10 bar, up to 145 psi
Max. Speed	see chart

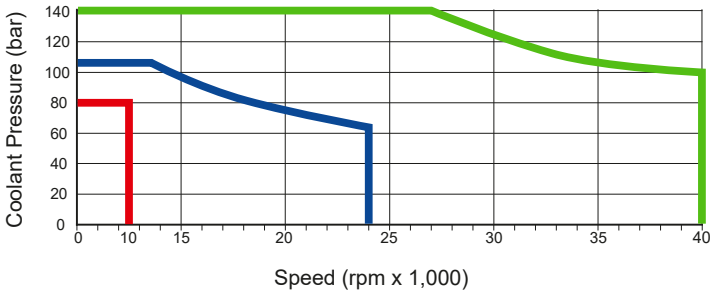

902-551 / 1114-150

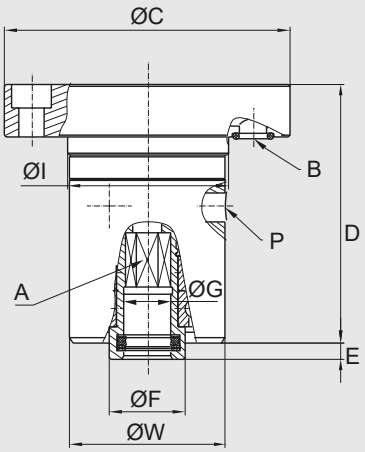

1114-938-343

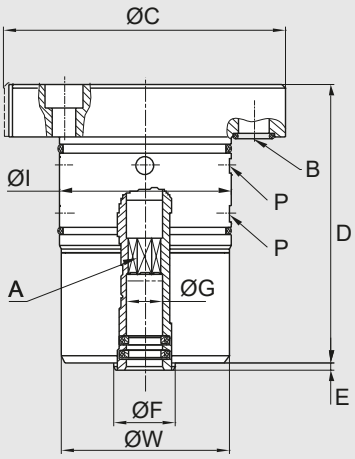

1114-160-318

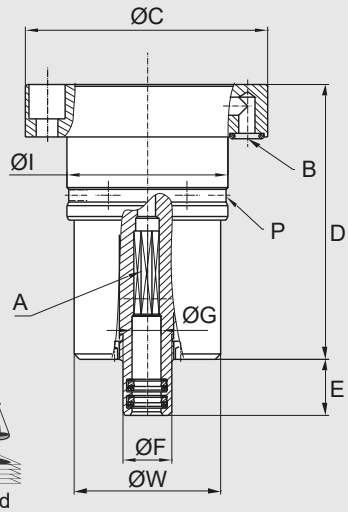

Patented

	Ordering Number	B Supply Connection	C Flange Diameter	D Overall Length	A Rotor Connection	E Rotor Length	F Rotor OD	G Bore Diameter	I Pilot Housing Diameter	P Drain Size Ø	W Housing Ø	Sealing Technology
	902-551	8	80	74	Hexagon 11 h9	4.5	21	13 H7	45 d9	3x Ø8	44d9	Pop-Off®
	1114-150	8	80	74	Hexagon 11 h9	4.5	21	13 H7	45 d9	3x Ø8	44d9	AutoSense®
	1114-938-343	9	79	78	Octagon 9.25 d10	2	17	10.1 F9	48 e7	4x Ø5 (2x)	47	AutoSense®
	1114-160-318	5	68	77	Octagon 7.4 d10	16	13.5	8.1 H7	45 g5	6x Ø3	41	AutoSense®

DEUBLIN

1117 Series Bearingless "Closed Seal" Rotary Unions for Continuous Coolant Service

- Single passage for coolant or MQL
- Closed seals for transfer line and similar applications
- Full-flow design has no obstructions to trap swarf or debris
- Balanced mechanical seals made from silicon carbide for long life even under difficult operating conditions
- Compact size can be adapted for custom installations
- Anodized aluminum housing resists corrosion

Operating Data

Media	Water-based Coolant MQL (oil mist) up to 10 bar (145 psi)		
Filtration	ISO 4406:2017 Class 17/15/12, max. 60 micron		
Max. Speed	see chart		
Max. Pressure	see chart		
Max. Flow	82 l/min	21.6 gpm	Standard
	24.3 l/min	6.4 gpm	High Speed (HS)
			Very High Pressure (VHP)
Max. Temperature	71 °C	160 °F	

DO NOT RUN DRY

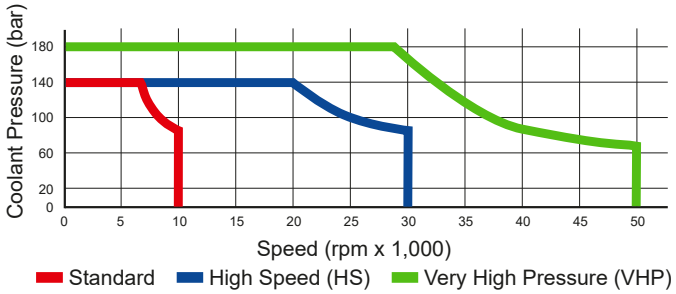

Axial Connection

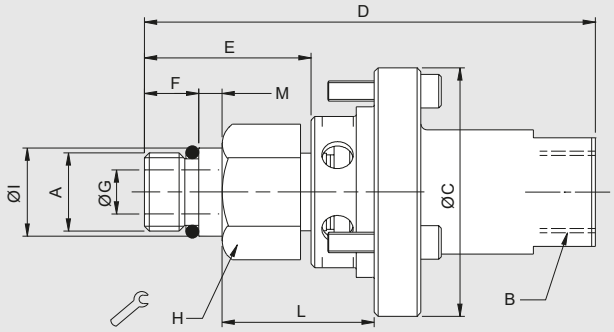

Radial Connection

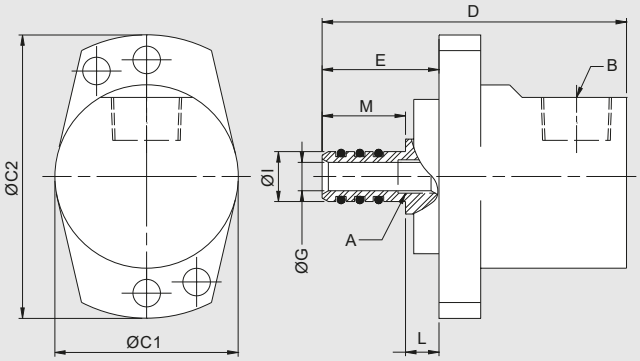

		Ordering Number	B Supply Connection	C Overall Diameter	D Overall Length	L Mounting Distance	A Rotor Connection	E Rotor Length	F Thread Length	G Bore Diameter	H Across Flats	I Pilot Diameter	M Pilot Length	Max. Speed (rpm)
S	Radial	1117-711[A]	⅜ NPT	44 x 68	73	8.0 / 7.5	12 f7	28	–	7	–	11.984 / 11.966	20	10,000
HS	Radial	1117-792	G ⅜	44	72	7.5 / 7.0	12 f7	21	–	7	–	11.984 / 11.966	20	30,000
HS	Axial	1117-002-116	⅜ NPT	51	92	31.7 / 30.5	M16 x 1.5 LH	34	11	9	24	17.993 / 17.988	5	30,000
HS	Axial	1117-058-116	G ⅜	51	92	31.7 / 30.5	M16 x 1.5 LH	34	11	9	24	17.993 / 17.988	5	30,000
HS	Axial	1117-002-111	⅜ NPT	51	95	31.7 / 30.5	⅜-18 UNF LH	37	14	9	15/16"	16.649 / 16.644	5	30,000
VHP	Axial	1117-490-493	⅜ PT	54	105	39.6 / 38.6	M12 x 1.25 LH	40	12	5	18	14.000 / 13.995	5	50,000

Note A: Union includes integral lip seals for added spindle protection.

DEUBLIN

1121 Series Bearingless Pop-Off® "Micro Stroke" Rotary Unions for Coolant Service with unlimited Dry Running

- Single passage for coolant or MQL
- Pop-Off® technology allows unlimited dry running without media pressure
- Ultra-short 0.1 mm pop-off stroke restricts drainage of residual coolant during tool change
- Full-flow design has no obstructions to trap swarf or debris
- Balanced mechanical seals made from silicon carbide for long life even under difficult operating conditions
- Anodized aluminum housing resists corrosion

Operating Data

Media	Water-based Coolant MQL (oil mist) up to 10 bar (145 psi)		
Filtration	ISO 4406:2017 Class 17/15/12, max. 60 micron		
Max. Speed	40,000 min^{-1}	40,000 rpm	Standard
	50,000 min^{-1}	50,000 rpm	High Speed (HS) / Very High Pressure (VHP)
Max. Pressure	210 bar	3,045 psi	
Max. Flow	24.3 l/min	6.4 gpm	
1121-330-327	38.7 l/min	10.2 gpm	
1121-330-345	82 l/min	21.6 gpm	
Max. Temperature	71 °C	160 °F	

NO COMPRESSED AIR WITH ROTATION

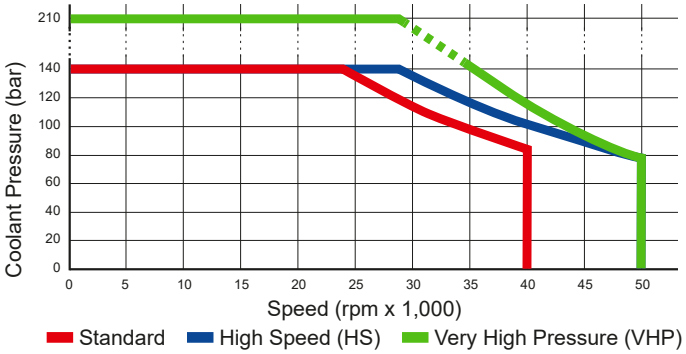

Axial / Radial Connection

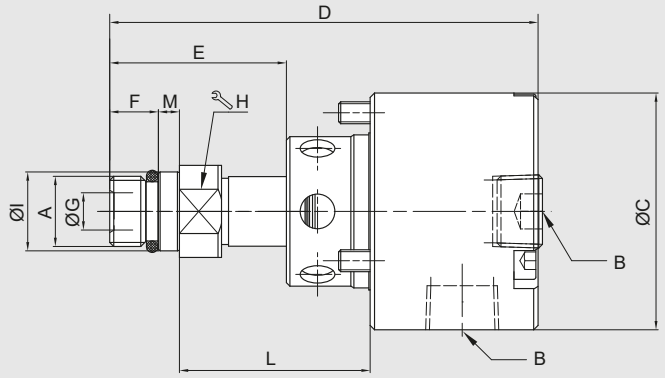

Axial Connection

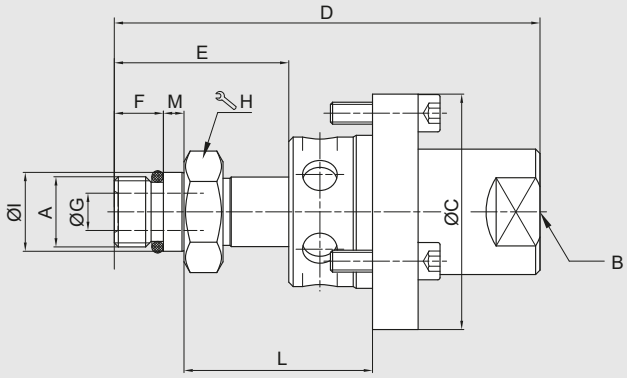

	Connect.	Ordering Number	B Supply Connection	C Overall Diameter	D Overall Length	L Mounting Distance	A Rotor Connection	E Rotor Length	F Thread Length	G Bore Diameter	H Across Flats	I Pilot Diameter	M Pilot Length	Max. Speed (rpm)
Standard	Radial	1121-300-345	⅜ PT	54	97	44.0 / 43.0	M16 x 1.5 LH	40	11	9	21	17.993 / 17.988	5	40,000
		1121-330-327	⅜ PT	54	94	39.6 / 38.6	M12 x 1.25 LH	37	12	6	18	14.000 / 13.995	5	40,000
		1121-330-345	⅜ PT	54	97	44.0 / 43.0	M16 x 1.5 LH	40	11	9	21	17.993 / 17.988	5	40,000
	A / R	1121-300-327	Rc ⅜ Axial & Radial	54	94	39.6 / 38.6	M12 x 1.25 LH	37	12	6	18	14.000 / 13.995	5	40,000
		1121-380-345	G ⅜ Radial ¼ PT Axial	54	102	44.0 / 43.0	M16 x 1.5 LH	40	11	9	21	17.993 / 17.988	5	40,000
	Axial	1121-205-201	M24 x 1.5 LH Outer Thread	35	98	54.0 / 50.5	M16 x 1.5 LH	37	11	9	21	17.993 / 17.988	5	40,000
		1121-400-327	⅜ PT	54	94	39.6 / 38.6	M12 x 1.25 LH	37	12	6	18	14.000 / 13.995	5	40,000
		1121-400-345	⅜ PT	54	98	44.0 / 43.0	M16 x 1.5 LH	40	11	9	21	17.993 / 17.988	5	40,000
HS	A.	1121-410-493	⅜ PT	54	105	39.6 / 38.6	M12 x 1.25 LH	40	12	5	18	14.000 / 13.995	5	50,000
VHP	Axial	1121-910-913	Ø5 Counter Bore	18	42	30.2 / 29.8	M5 RH	15	9	1.6	8	5.496 / 5.492	3	50,000

DEUBLIN

1124 Series Bearingless AutoSense® Rotating Union for Coolant and Compressed Air, with unlimited Dry Running

- Single passage for coolant and compressed air
- Patented AutoSense® technology, changes automatically between closed seals and controlled leakage, depending on media
- Full-flow design has no obstructions to trap swarf or debris
- Balanced mechanical seals made from silicon carbide for long life even under difficult operating conditions
- Anodized aluminum housing, resists corrosion
- Available with threaded rotor only

Operating Data

Media	Water-based Coolant MQL (oil mist) up to 10 bar (145 psi)
Filtration	ISO 4406:2017 Class 17/15/12, max. 60 micron
Max. Speed	see graphic/table
Max. Pressure	see graphic/table
Max. Flow	Coolant see table
Max. Temperature	71 °C 160 °F

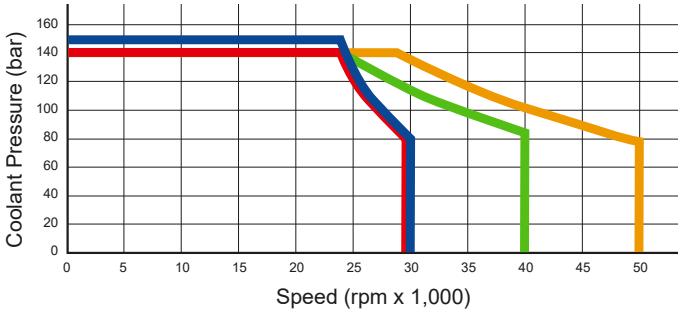

Axial / Radial Connection

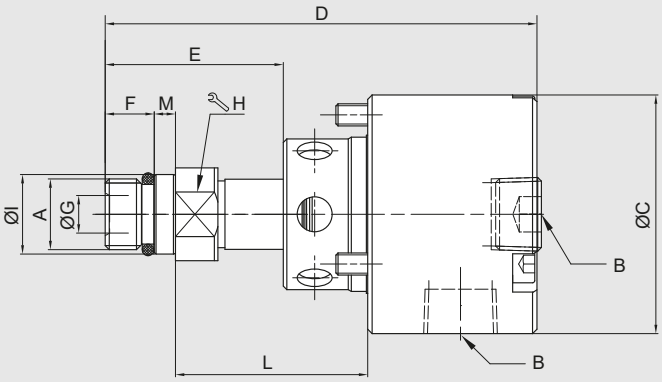

Axial Connection

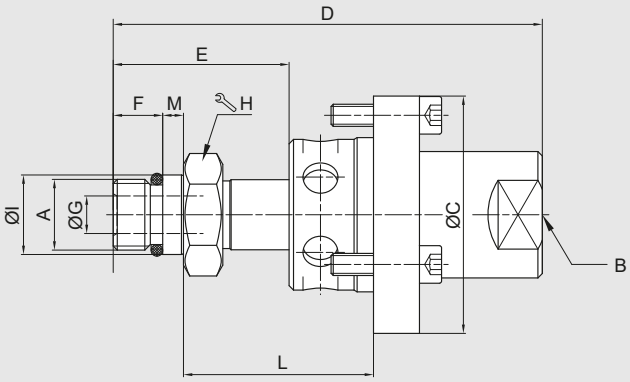

Patented

	Ordering Number	Flow Rate	B Supply Connection	C Overall Diameter	D Overall Length	L Mounting Distance	A Rotor Connection	E Rotor Length	F Thread Length	G Bore Diameter	H Across Flats	I Pilot Diameter	M Pilot Length	Max. Speed (rpm)
	1124-036-301	38.0 l/min	PT 3/8 Axial	54	97	43.0 / 44.0	M16 x 1.5 LH	40	11	8.5	24	17.993 / 17.988	5	30,000
	1124-071-931	82.0 l/min	G 3/8 Axial	64	75	35.4 / 36.3	M14 x 1 LH	33	12	8.0	19	14.489 / 14.494	7	30,000
	1124-205-201	82.0 l/min	M24 x 1,5 LH Outer Thread	35	98	54.0 / 51.5	M16 x 1.5 LH	38	11	8.5	21	17.993 / 17.988	5	40,000
	1124-300-345	24.3 l/min	Rc 3/8 Radial & Axial	54	98	41.0 / 46.4	M16 x 1.5 LH	40	11	8.5	21	17.993 / 17.988	5	40,000
	1124-330-240	82.0 l/min	Rc 3/8 Radial & Axial	54	98	42.3 / 44.7	M16 x 1.5 LH	40	11	8.5	17	17.993 / 17.988	5	40,000
	1124-270-022	24.3 l/min	G 1/4 Axial	45	62	14.5 / 13.3	M10 x 1 LH PT11	29	12	5.0	14	10.989 / 10.994	7	50,000

DEUBLIN

1154 Series Bearingless AutoSense® "Long Stroke" Rotary Unions for Coolant and Air Service, with unlimited Dry Running

- Single passage for coolant or MQL
- Patented AutoSense® technology automatically changes between closed seals and controlled leakage operation in response to the kind of media
- Stator with long stroke to track draw bar movement even when the union is mounted on the clamping device
- Full-flow design has no obstructions to trap swarf or debris
- Balanced mechanical seals made from silicon carbide for long life even under difficult operating conditions
- Anodized aluminum housing resists corrosion

Operating Data

Media	Water-based Coolant MQL (oil mist) up to 10 bar (145 psi) Air up to 10 bar (145 psi)	
Filtration	ISO 4406:2017 Class 17/15/12, max. 60 micron	
Max. Speed	50,000 min^{-1}	50,000 rpm
Max. Pressure	140 bar	2,031 psi
Max. Flow	24.3 l/min	6.4 gpm
Max. Temperature	71 °C	160 °F

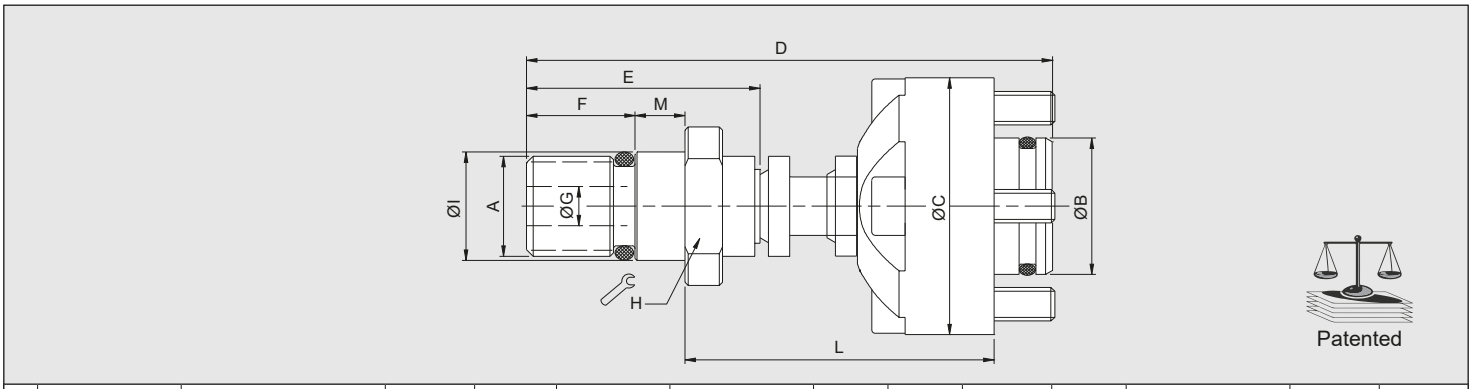

	Ordering Number	B Supply Connection	C Overall Diameter	D Overall Length[A]	L Mounting Distance	A Rotor Connection	E Rotor Length	F Thread Length	G Bore Diameter	H Across Flats	I Pilot Diameter	M Pilot Length	Max. Speed (rpm)
Axial Connection	1154-002-109	16.4 Counterbore	31	63	37.0 / 30.0	M12 x 1 RH	28	13	5	15	12.994 / 12.989	6	50,000
	1154-002-133	16.4 Counterbore	31	65	37.0 / 30.0	M16 x 1.5 LH	30	15	4	19	17.994 / 17.989	6	50,000
	1154-002-140	16.4 Counterbore	31	63	37.0 / 30.0	M12 x 1.25 LH	28	13	5	15	12.994 / 12.989	6	50,000
	1154-003-107	20 Counterbore	39	71	40.0 / 33.0	M12 x 1.25 LH	36	13	5	15	12.994 / 12.989	6	50,000
	1154-003-137	20 Counterbore	38.5	62	31.0 / 25.0	M12 x 1.25 LH	27	13	5	15	12.994 / 12.989	6	50,000
	1154-003-163	20 Counterbore	39	62	32.0 / 25.0	M16 x 1.5 LH	27	12	5	19	17.994 / 17.989	6	50,000
	1154-003-327	20 Counterbore	39	56	31.0 / 25.0	M12 x 1.5 LH	27	13	5	15	14.000 / 13.995	6	50,000

Note A: Overall Length (D) is at maximum Mounting Distance (L).

DEUBLIN

1159 Series Bearingless AutoSense® "Long Stroke" Rotary Unions for Coolant and Air Service with CoolControl® Technology

- Single passage for all media
- Patented AutoSense technology automatically changes between closed seals and controlled leakage operation in response to type of media
- Non-rotating element has "stroke" (axial movement) of up to 13.5 mm, to track drawbar movement even when the union is mounted on the clamping device
- CoolControl technology utilizes an air pilot to hold seals closed during axial drawbar movements, thus mimimizing coolant leakage during tool change cycles
- Full flow design has no obstructions to trap chips or debris
- Balanced mechanical seals made from silicon carbide

Operating Data

Media	Water-based Coolant MQL (oil mist) Air up to 10 bar (145 psi)	
Filtration	ISO 4406:2017 Class 17/15/12, max. 60 micron	
Max. Speed	50,000 min^{-1}	50,000 rpm
Max. Pressure	210 bar	3,045 psi
Max. Flow	33 l/min (6 mm bore)	8.7 gpm (6 mm bore)
Max. Temperature	71 °C	160 °F

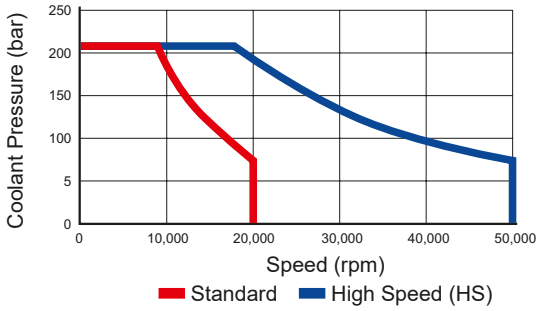

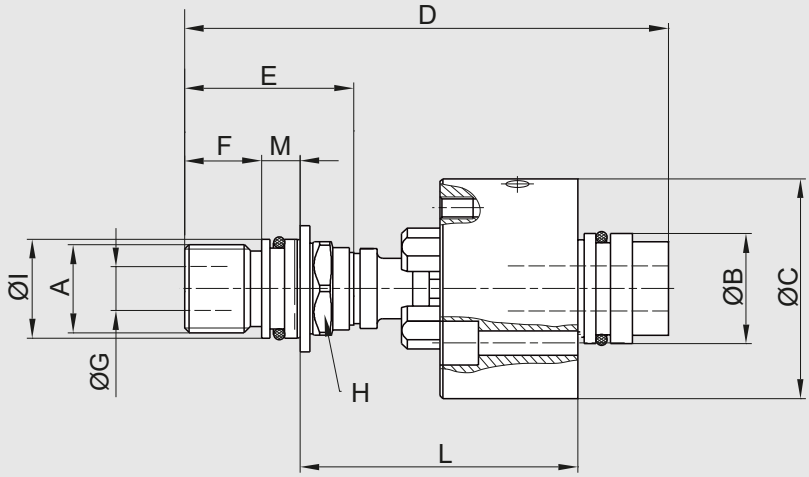

Patented

	Ordering Number	B Supply Connection	C Overall Diameter	D Overall Length	L Mounting Distance	A Rotor Connection	E Rotor Length	F Thread Length	G Bore Diameter	H Across Flats	I Pilot Diameter	M Pilot Length	Max. Speed (rpm)
S	1159-026-115	20.0 mm Counterbore	40	88.0	50.5 / 38.5	M16 x 1.5 RH	31.9	14	6.5	17	17.994 / 17.989	7	20,000
HS	1159-024-107	16.4 mm Counterbore	31	55.5	31.0 / 26.5	M8 x 1 LH	24.5	12.5	4	12	8.995 / 8.991	3.5	50,000
HS	1159-003-137	20.0 mm Counterbore	38.5	79.0	30.0 / 23.0	M12 x 1.25 LH	26.9	13	5	15	12.994 / 12.990	6	50,000
HS	1159-020-101	16.4 mm Counterbore	31	79.3	45.7 / 34.0	M12 x 1 RH	24.2	13	6	17	12.994 / 12.989	6	50,000

DEUBLIN

Bearingless Rotary Union Cartridge Design Compact Bearingless Rotary Union for smallest installation space

- Single passage available with almost all sealing technologies
- Design with additional functions: e.g. “long stroke” stator with hub to allow drawbar movement even when rotary union is mounted onto the clamping unit
- Full-flow design has no obstructions to trap swarf or debris
- Balanced mechanical seals made from silicon carbide / carbon graphite for limited dry run for long life
- Anodized aluminum housing resists corrosion
- Dry run capability depending on sealing technology and materials

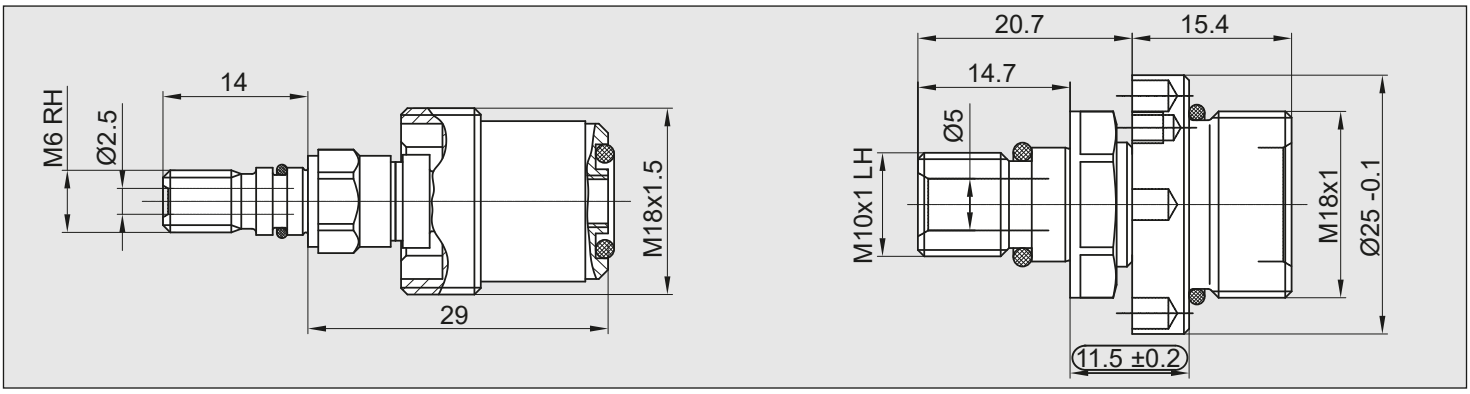

Operating Data / 1121-251-434

Media (depending on model)	Water-based Coolant, Cutting Oil	
Sealing Technology	Pop-Off® Seals SIC/SIC	
Filtration	ISO 4406:2017 Class 17/15/12, max. 60 micron	
Max. Speed	150,000 min^{-1}	150,000 rpm
Max. Pressure	180 bar	2,707 psi
Max. Flow	7.4 l/min	2 gpm

Operating Data / 1124-259-260

Media (depending on model)	Water-based Coolant, Compressed Air up to 10 bar, up to 145 psi	
Sealing Technology	AutoSense® Seals SIC/SIC	
Filtration	ISO 4406:2017 Class 17/15/12, max. 60 micron	
Max. Speed	30,000 min^{-1}	30,000 rpm
Max. Pressure	140 bar / 10 bar	2,031 psi / 145 psi
Max. Flow	7.4 l/min	2 gpm

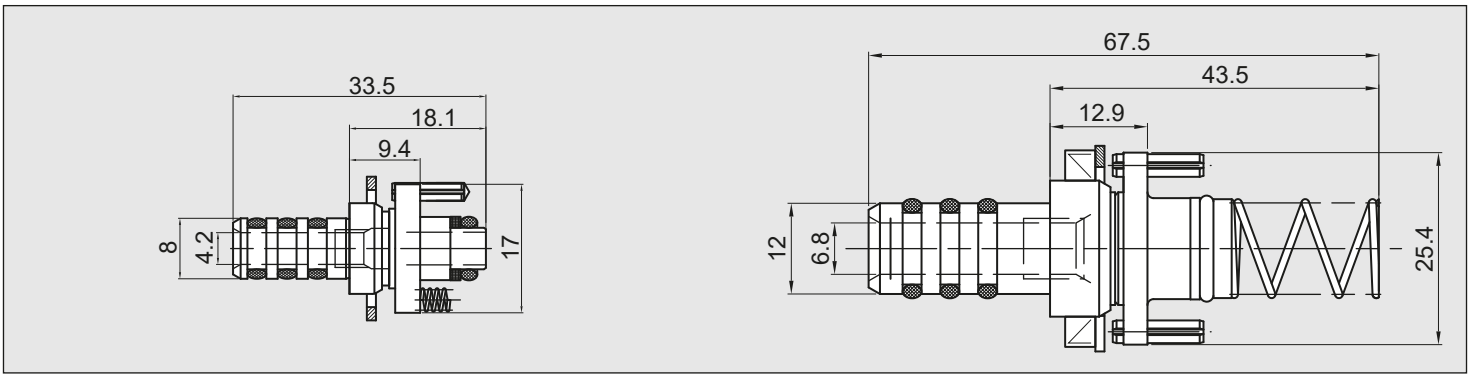

Operating Data / 993-880

Media (depending on model)	Water-based Coolant, Cutting Oil, Compressed Air up to 6 bar	
Sealing Technology	Closed Seal – Limited Dry Run Seals CG/SIC	
Filtration	ISO 4406:2017 Class 17/15/12, max. 60 micron	
Max. Speed	15,000 min^{-1}	15,000 rpm
Max. Pressure	80 bar / 6 bar	1,160.3 psi / 87 psi
Max. Flow	9.4 l/min	2.5 gpm

Operating Data / 9012-810

Media (depending on model)	Coolant	
Sealing Technology	Closed Seal Seals SIC/SIC	
Filtration	ISO 4406:2017 Class 17/15/12, max. 60 micron	
Max. Speed	15,000 min^{-1}	15,000 rpm
Max. Pressure	110 bar	1,595.42 psi
Max. Flow	49.8 l/min	13.2 gpm

DEUBLIN

2620 Series 2-Passage Rotary Unions for Various Media

- Two independent passages for applications such as clamping and unclamping, work piece sensing, and cooling
- Balanced mechanical seals for each passage provide long life and reduced torque even at maximum pressure
- Closed seals provide continuous containment of media
- Labyrinth protection for ball bearings

Operating Data

Media	see chart	
Filtration	ISO 4406:2017 Class 17/15/12, max. 60 micron	
Max. Speed	12,000 min^{-1}	12,000 rpm
Max. Pressure	see table	
Max. Flow	69 l/min	18.2 gpm (per passage)
Max. Temperature	71 °C	160 °F

2620-XXX-252 **2620-XXX-940** **2620-XXX-157**

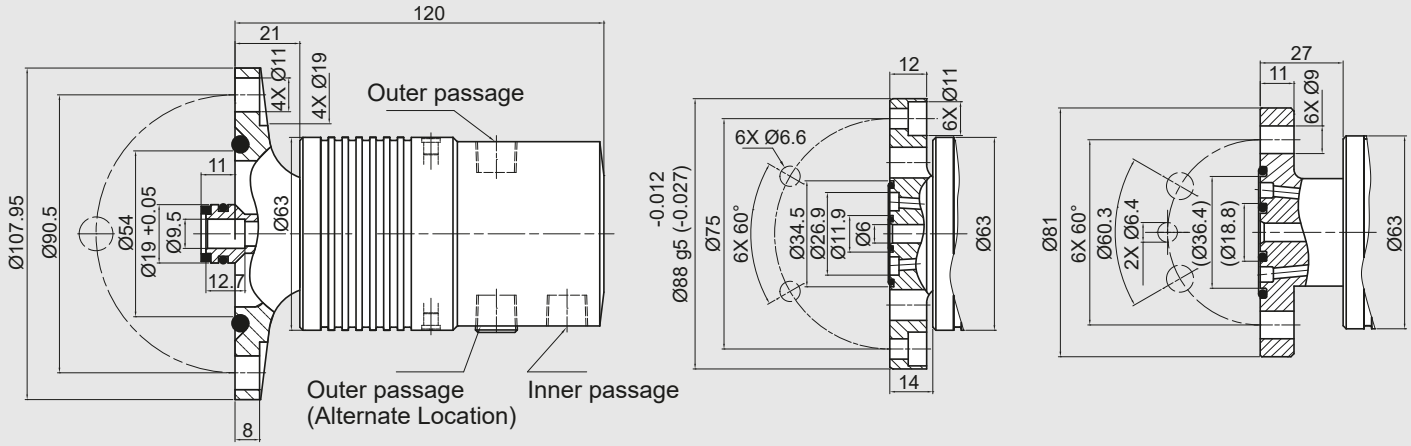

Inner Passage		Outer Passage		Ordering Number	Notes	Supply Connections		Ø Flanged Rotor
Media	Max. Pressure	Media	Max. Pressure			Inner Passage	Outer Passage	
Hydraulic Oil	140	Hydraulic Oil	70	2620-040-252	–	¼ NPT	¼ NPT	108
				2620-042-940	–	G ¼	G ¼	88
				2620-040-157	–	¼ NPT	¼ NPT	81
Hydraulic Oil	140	Hydraulic Oil	70	2620-045-252	B	¼ NPT	¼ NPT	108
Hydraulic Oil	140	Compressed Air	10	2620-160-252	A	¼ NPT	¼ NPT	108
				2620-162-940	A	G ⅜	G ⅛	88
				2620-160-157	A	¼ NPT	¼ NPT	81
Hydraulic Oil	40	Hydraulic Oil	40	2620-004-252	B	¼ NPT	¼ NPT	108
Coolant	140	Compressed Air	10	2620-260-252	A	¼ NPT	¼ NPT	108
				2620-262-940	A	G ⅜	G ⅛	88
				2620-260-157	A	¼ NPT	¼ NPT	81
Compressed Air	10	Compressed Air	10	2620-520-252	B	¼ NPT	¼ NPT	108
				2620-522-940	B	G ⅜	G ⅛	88
				2620-520-157	B	¼ NPT	¼ NPT	81

(A) Compressed air seals may be lubricated through oil cup or by using oiled compressed air.
(B) Compressed air seals require no external lubrication.

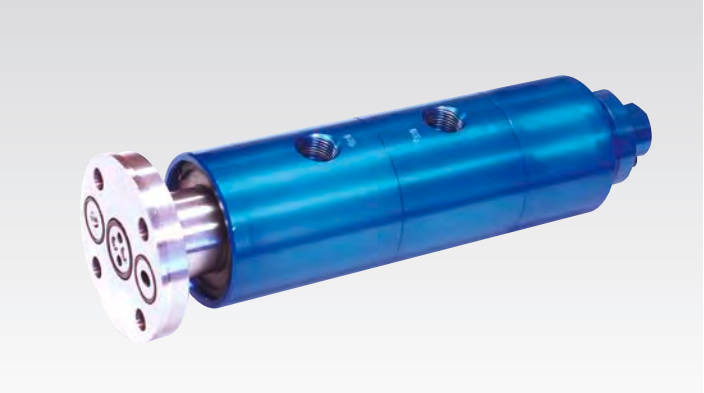

DEUBLIN

2630/2640/2650 Series 3 to 5-Passage Rotary Unions for Various Media

- Three, four or five independent passages for applications such as clamping and unclamping, work piece or tool sensing, and spindle cooling
- Balanced mechanical seals in all passages for low torque and long life even with high speeds and pressures
- Closed seals provide continuous containment of media
- No external lubrication of air seals is required
- Labyrinth protection for ball bearings

Operating Data

Media	see table	
Filtration	ISO 4406:2017 Class 17/15/12, max. 60 micron	
Max. Speed	10,000 min^{-1}	10,000 rpm
Max. Pressure		
Coolant or Oil	140 bar	2,031 psi
Air	10 bar	145 psi
Max. Flow per passage		
Serie 2630	39 l/min	10.2 gpm
Serie 2640	17 l/min	4.5 gpm
Serie 2650	17 l/min	4.5 gpm
Max. Temperature	71 °C	160 °F

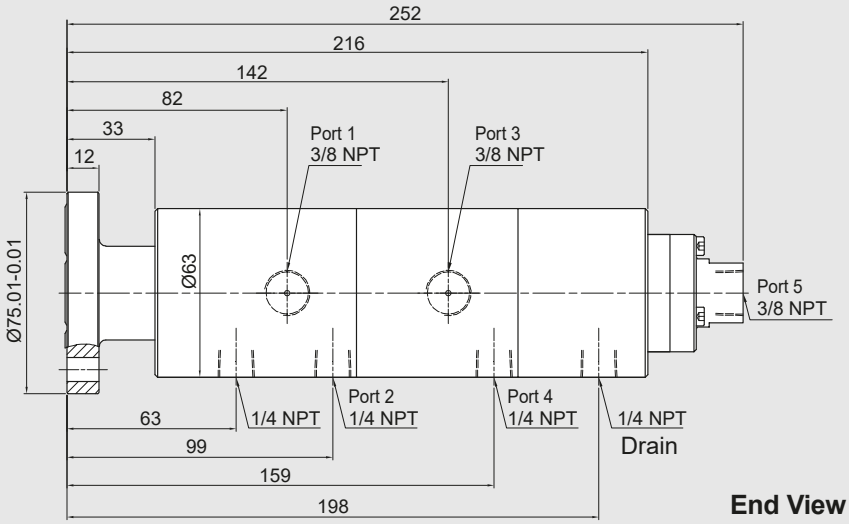

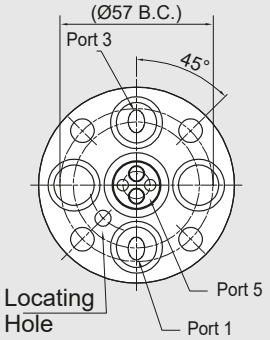

End View (2630-100-001 Series shown)

Number of Passages	Ordering Number	Port #1	Port #2	Port #3	Port #4	Port #5
3	2630-100-001	Hydraulic or Cooling Oil	Drain	Hydraulic or Cooling Oil	Drain	Coolant / MQL / Compressed Air[A]
	2630-200-001	Hydraulic or Cooling Oil	Compressed Air[B]	Coolant	Drain	–
	2630-300-001	–	Compressed Air[B]	Coolant	Compressed Air[B]	–
	2630-600-001	Compressed Air[B]	Compressed Air[B]	Coolant / MQL / Compressed Air[A]	–	–
4	2640-100-001	Hydraulic or Cooling Oil	Compressed Air[B]	Hydraulic or Cooling Oil	Drain	Coolant / MQL / Compressed Air[A]
	2640-600-001	Compressed Air[B]	Compressed Air[B]	Compressed Air[B]	Coolant / MQL / Compressed Air[A]	–
5	2650-000-001	Hydraulic or Cooling Oil	Compressed Air[B]	Coolant	Compressed Air[B]	Hydraulic or Cooling Oil
	2650-600-001	Compressed Air[B]	Compressed Air[B]	Compressed Air[B]	Compressed Air[B]	Coolant
	2650-700-001	Hydraulic Oil	Hydraulic Oil	Hydraulic Oil	Compressed Air[B]	Hydraulic Oil

Note A: This passage operates with AutoSense® technology. With dry air, it operates with controlled leakage, with MQL and coolant, it operates with closed seals.
Note B: This passage operates with closed seals, appropriate for tool or work piece sensing applications.

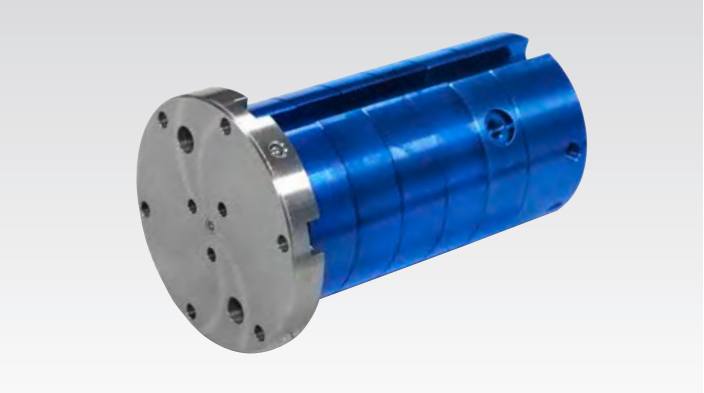

DEUBLIN

260x Series Multi-Channel High Speed Unions (1000+ RPM) for DDRT* Applications Requiring Various Media

- 3-8 Passages for Various Media
- Applications include clamping and unclamping, work piece or tool sensing, air cleaning, and spindle cooling
- Minimized axial length
- No external lubrication required for air seals
- Balanced mechanical seals in all passages for low torque and long life even with high speeds and pressures
- Closed seals provide continuous containment of media with no by-pass leakage
- Dual precision ball bearings for smooth operation

* Direct Drive Rotary Table

Operating Data

Media	Hydraulic Oil Cooling Oil Air up to 10 bar (145 psi) Coolant	
Filtration	ISO 4406:2017 Class 17/15/12, max. 60 micron	
Max. Speed	see table	
Max. Pressure		
Coolant or Oil	140 bar	2,031 psi
Air	10 bar	145 psi
Max. Temperature	71 °C	160 °F

Rotor-mounted Radial Connection Connection 1

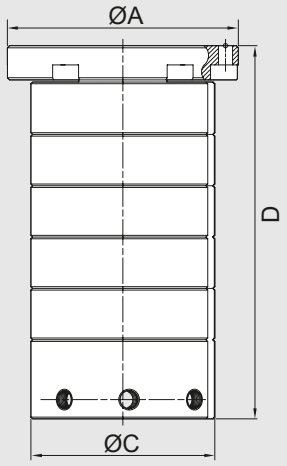

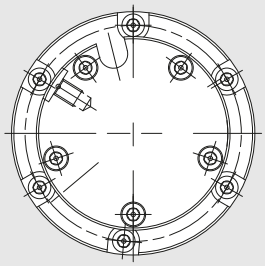

Rotor-mounted Axial Connection Connection 2

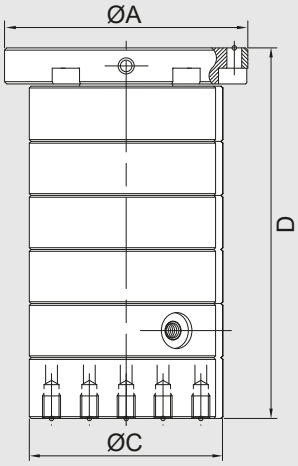

Number of Passages	Connection	Ordering Number	Max. Speed	Media Channels	D Overall Length	C Housing Diameter	A Flange Diameter
3	1	2603-140-108	7,000	2x Oil, 1x Air	140	63	108
3	1	2603-141-108	3,000	3x Air	140	63	108
3	1	2603-145-108	7,000	2x Oil, 1x Air	140	68	108
4	2	2604-102-108	3,000	3x Oil, 2x Air	164.5	86	108
6	1	2606-075-102	2,500	2x Cooling Oil, 2x Hydraulic Oil, 2x Air	163	75	75
6	1	2606-250-101	1,500	4x Oil, 2x Cooling Oil or Coolant	212	86	100
8	1	2608-200-103	1,500	3x Oil, 3x Air, 2x Cooling Oil	258	115	158

DEUBLIN

Hybrid-Multi-Passage Rotary Unions up to 10-Passages for various Media

- Independent channels for various applications, e.g. clamping/ unclamping, tool clamping, cooling and work piece sensoring
- Combination of various sealing technologies for compact design, high pressures for hydraulic and coolant applications and high flow
- Special balanced sealing technologies for low temperatures and long life
- Various installation options for easy and fast installation through media plug-and-socket connection (Deublin tubes)

Operating Data

Max. Speed	see table	
Max. Pressure		
Hydraulic	up to 200 bar	2,900 psi
Cooling Water	up to 6 bar	87 psi
Coolant	up to 140 bar	2,030 psi
Air, MQL	up to 10 bar	145 psi
Vacuum	up to 0.07 bar absolute	1.015 psi
Max. Temperature	71 °C	160 °F

Bore-mounted Axial Connection Connection 1

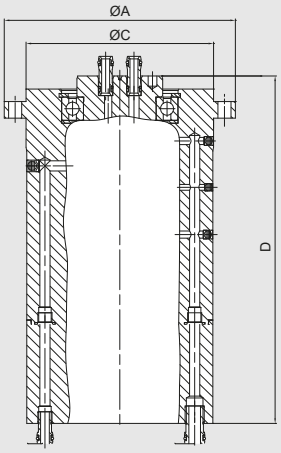

Rotor-mounted Axial Connection Connection 2

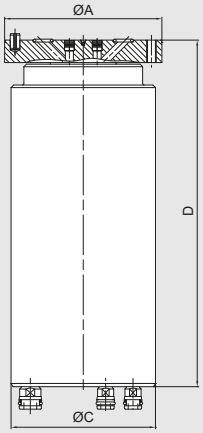

Rotor-mounted Radial Connection Connection 3

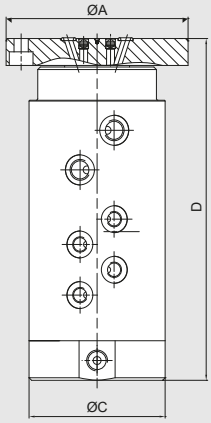

Passages	Connection	Ordering Number	Max. Speed [rpm]	Media	D Overall Length	C Overall Diameter	A Ø Flange
3	1	SP0561	250	2x Hydraulic, 1x Compressed Air	239	128	159
4	2	SP0653	1,200	4x Compressed Air when stationary	157	90	98 f7
4	2	SP0653	1,200	4x Compressed Air when stationary	157	90	98 g7
5	2	SP0664	2,500	3x Hydraulic, 2x Compressed Air	245	110	132 g7
5	3	SP0930	6,000	3x Hydraulic, 2x Compressed Air	189	88	58
6	2	SP0501	600	3x Hydraulic, 3x Compressed Air when stationary	205	90	98 f7
6	1	SP0668	5,000	2x Hydraulic, 2x Cooling Water, 1x Air, 1x Coolant	347	89	86 f7
6	3	2507G-F132M	500	4x Hydraulic, 2x Compressed Air	238	110	132 g6
7	1	SP0856	20	4x Hydraulic, 2x Compressed Air, 1x Vacuum	239	128	159
7	1	2507Z-Q059M	500	2x Hydraulic, 3x Compressed Air, 2x Vacuum	239	128	159
10	1	SP0721	20	8x Hydraulic, 2x Compressed Air	239	128	159
10	3	2510G-F132M	800	4x Hydraulic, 5x Compressed Air when stationary, 1 Compressed Air	287	110	132 g6

DEUBLIN

Slip Ring Series SRC

- For automation of process flow for work piece infeed, positioning, chipping, in milling heads and round tables up to 360° rotation
- Wide range for the transmission of data, signal and power
- Conductor Rings: Gold coated, pure copper inside, manufactured with high precision, no oxidation, very low contact friction
- Application of precious metal only where it is necessary;
- Coating optimized in type, class and hardness
- Monofilament Technology: Low contact resistance, low abrasion; for signal and data transmission also for current up to 25 A
- Polyfilament Technology: Very low contact resistance; for the transmission of signal and high data rate
- Graphite composite brushes: Longer life, high speed; for high current from 30 A to over 100 A; speed up to 250 rpm;

Operating Data

Features	axial cable outlet on the housing
Electrical Channels	up to 99
Max. Current	Signal 5 A; Power 60 A
Data Commun. Speed	100 Mbps
Conductor Ring	gold coated
Brushes up to 25 A	Monofilament (≤25 A); Graphite (>25 A)
Central Bore	only SRC-40
Protection Class	IP 55 – max IP 67
Max. Speed	250 min^{-1} / 250 rpm
Nominal Voltage	Voltage 880 V AC/DC; Signal 190 V DC

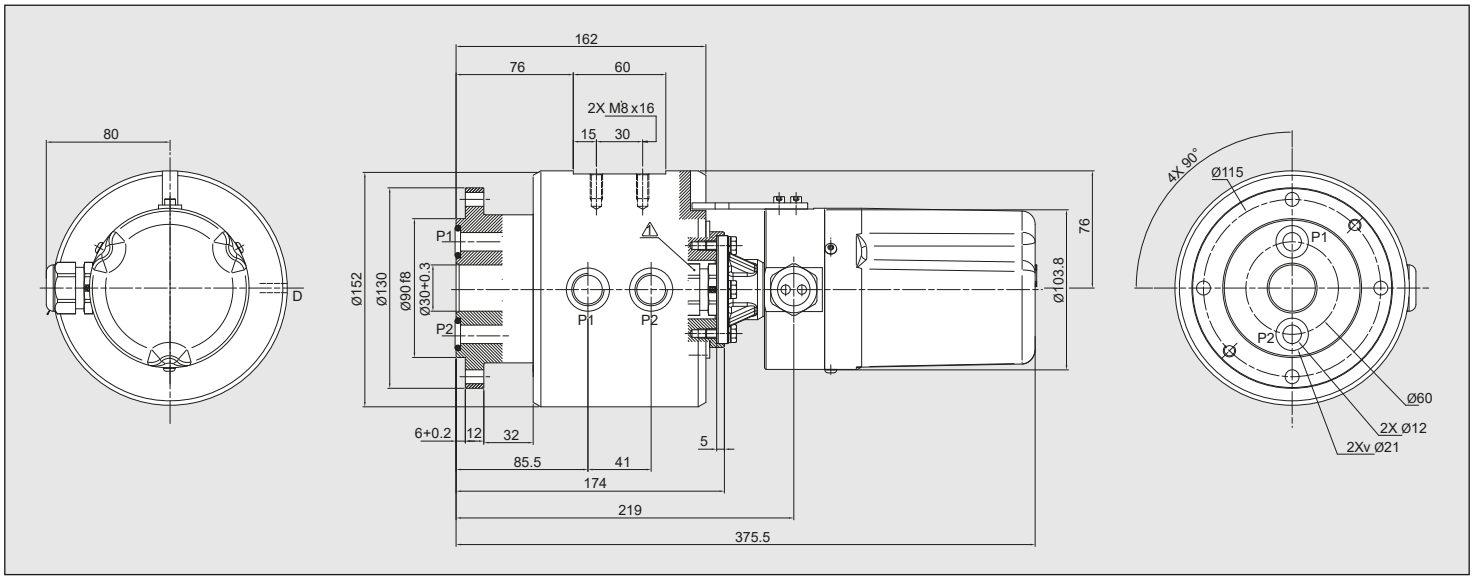

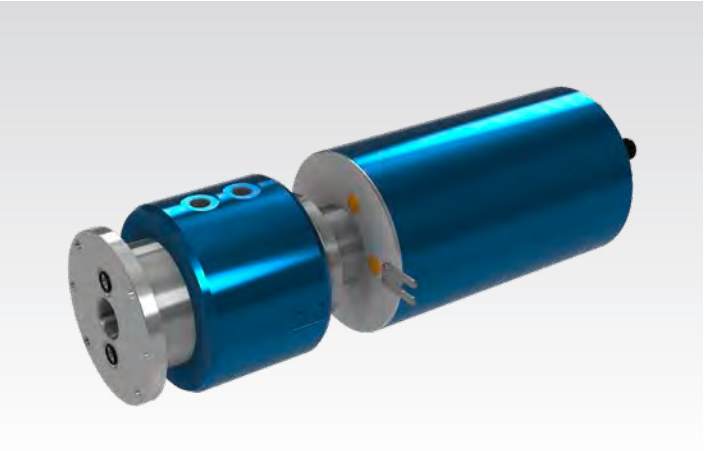

CMB Combo

Features	consists of MPSS Rotary Union and Slip Ring SRC / SRD series
Media passages	1 - 2 - 4 - 6 - 8
Passage dimension	Ø 6 - Ø 10 - Ø 12 mm
Fluids	depending on the design: air, vacuum or hydraulics, water on request (reduced service life)
Speed	for slow speeds
Central bore	30 mm for wire/cables
Flange connection	yes
Drainage	between the channels
Flange Connection	for SRG SRD at the back

DEUBLIN

Slip Ring Series SRD

- For automation of process flow for work piece infeed, positioning, chipping, in milling heads and round tables up to 360° rotation
- Wide range for the transmission of data, signal and power
- Conductor Rings: Gold coated, pure copper inside, manufactured with high precision, no oxidation, very low contact friction
- Application of precious metal only where it is necessary;
- Coating optimized in type, class and hardness
- Monofilament Technology: Low contact resistance, low abrasion; for signal and data transmission also for current up to 25 A
- Polyfilament Technology: Very low contact resistance; for the transmission of signal and high data rate
- Graphite composite brushes: Longer life, high speed; for high current from 30 A to over 100 A; speed up to 250 rpm;

Operating Data

Features	radial cable outlet on the housing
Electrical Channels	up to 32
Max. Current	Signal 5 A; Power 60 A
Data Commun. Speed	100 Mbps
Conductor Ring	gold coated
Brushes up to 25 A	Monofilament (≤25 A); Graphite (>25 A)
Central Bore	only SRD-40
Protection Class	IP 55 – max IP 67
Max. Speed	250 min^{-1} / 250 rpm
Nominal Voltage	Voltage 640 V AC/DC; Signal 30 V DC

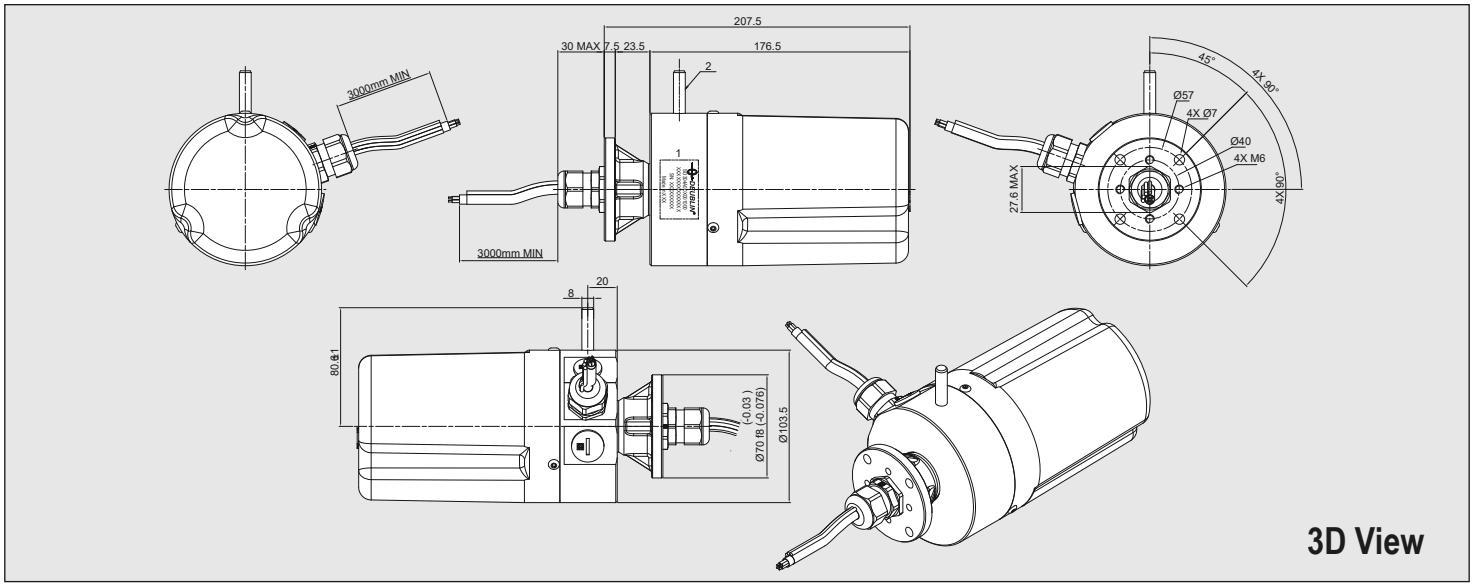

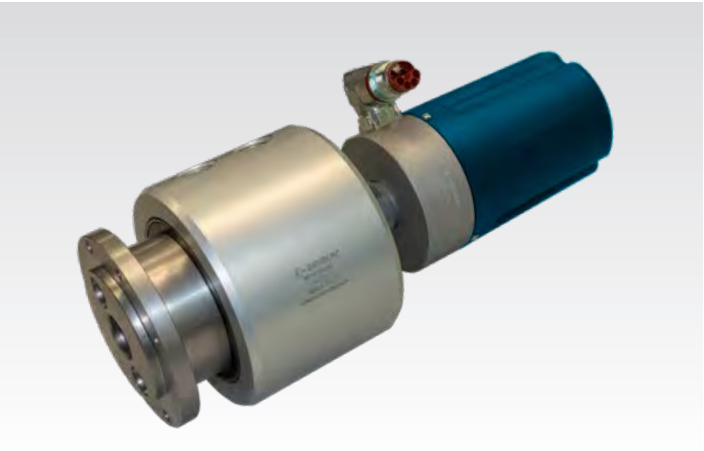

CMB Combo

Features	consists of MPSS Rotary Union and Slip Ring SRC / SRD series
Media passages	1 - 2 - 4 - 6 - 8
Passage dimension	Ø 6 - Ø 10 - Ø 12 mm
Fluids	depending on the design: air, vacuum or hydraulics, water on request (reduced service life)
Speed	for slow speeds
Central bore	30 mm for wire/cables
Flange connection	yes
Drainage	between the channels
Flange Connection	for SRG SRD at the back

Important Information

A Deublin Rotary Union is a precision-made piece of equipment and must be handled accordingly. Sealing between the rotating device – rotor – and the static device – stator – is mainly accomplished via floating seals. Improper use could result in premature leakage or failure.
Although Deublin Rotary Unions are of the highest quality and precision they are, by their very nature, a “wear and tear” product. It‘s important that they should be inspected periodically. Moreover, when seals wear out, the Rotary Union must be replaced or serviced to avoid subsequent leakage. Once a union begins to leak, it is paramount that the union be serviced immediately. Never work with leaking unions!
Deublin Rotary Unions must never be used for applications other than those specified in the catalog. It is strictly prohibited to use Deublin Rotary Unions with hydrocarbons or other flammable media as leakage may result in a fire or explosion. The use of our product on exotic or corrosive media is strictly prohibited without our prior approval. For applications other than those stated in the catalog, Deublin Engineering Department should be contacted for proper instructions. These instructions are provided by Deublin as general guidelines and do not contain exhaustive information about the installation, use or maintenance of unions. Operating instructions and installation manuals are available for Deublin products. Buyers and users of Deublin Rotary Unions should be certain that they have reviewed all of Deublin‘s product information. The operating and installation instructions must be strictly followed when installing Deublin Rotary Unions.

Factory Testing
All Deublin Rotary Unions are factory-tested under pressure prior to shipment. This thorough check ensures that each single Deublin Union is completely operational when you receive it and can – in most cases – be installed with no further consideration.

Warranty
The buyer‘s warranty rights assume that the product shipped be inspected upon receipt and all defects reported to Deublin in writing immediately or for no longer than a period of 2 weeks. Hidden defects must be reported to Deublin in writing immediately upon detection. The warranty is void when the Deublin Rotary Union is tampered with or misused in any way. Otherwise, our General Terms of Sale and Delivery are valid. It cannot be emphasised enough that all dynamic seal components are wear parts.

Deublin will not be held liable for damage resulting from improper use, incorrect warehousing, incorrect transport, faulty assembly, faulty operation, insufficient maintenance, incorrect handling, improper installation by the customer, the use of inappropriate accessories or spare parts and natural abrasion. Please request our General Terms of Sale and Delivery.

Lubrication and Maintenance
Depending on the Deublin product series and the operating parameters all Deublin Rotary Unions are either lubricated for life or have to be relubricated or serviced according to specially defined intervals. Please follow the respective operating instructions or the general “Relubrication Guide” for Deublin Rotary Unions.

Filtering
The service life of the seal is largely determined by filter quality and thus of vital importance for the proper operation of the Rotary Union. We recommend filtration of min. 60 µm. All installation and operating instructions must be carefully reviewed and strictly followed.

Service and Maintenance of Deublin Rotary Unions by Deublin
Use only Deublin spare parts for service of the Deublin Rotary Unions. Prior to service contact Deublin or any authorised Deublin representative. You can find a local Deublin representative at: www.deublin.com .
Most unions can be reconditioned in the field by use of Deublin Service Kits. Generally, we recommend having the Deublin Rotary Unions serviced by Deublin. Service is available at all Deublin factories. Factory rebuilt Rotary Unions carry a “New-Union-Warranty”.

Tension-free Installation
When installing Rotary Unions, special attention has to be paid to a flexible and tension-free hose connection. For additional recommendation please refer to our installation instructions.

Warning

Deublin Rotary Unions should not be used to convey flammable media (flash point ≤ 140 °F or 60 °C) as leakage may result in explosions or fires. Deublin Rotary Unions should be used in accordance with standard safety guidelines for the media, and in a well-ventilated area. The use of our product on hazardous or corrosive media is strictly forbidden.

Since its founding in 1945 as a small, family-owned business, Deublin consistently has adhered to a policy of designing and building the best products of their kind in the world. The result of this policy has been continuous growth through the years, and for this we are grateful to our many loyal customers.

Today, Deublin is the world's largest manufacturer of Rotary Unions, with state-of-the-art factories, technical sales and service, and local stocking in 14 countries on four continents, as well as a worldwide distribution network operating in more than 60 countries. Our global organization and extensive catalog of field-tested products ensure a precise match between each customer's requirements and an engineered solution. Deublin has been part of the HOERBIGER Group since 2019 and forms the core of the Rotary Solutions division.

We cordially invite you to visit our modern manufacturing facilities in Waukegan, Illinois, USA; Mainz, Germany; Monteveglio, Italy; Dalian, China; and Sao Paulo, Brazil.

Our Global Headquarters in Waukegan, Illinois, U.S.A.

Mainz, Germany

Monteveglio (Bo), Italy

Dalian, China

DEUBLIN
HOERBIGER Rotary Solutions

SERVICE AND STOCK ARE AVAILABLE THROUGHOUT THE WORLD

www.deublin.com

AMERICA

DEUBLIN USA
2050 Norman Drive
Waukegan, IL 60085-6747 U.S.A
Phone: +1 847-689 8600
Fax: +1 847-689 8690
E-Mail: info-us@deublin.com

DEUBLIN Brazil
Av. Fagundes de Oliveira, 538 - A11 - Piraporinha
CEP: 09950-300 - Diadema - SP - Brasil
Phone: +55 11-2455 3245
Fax: +55 11-2455 2358
E-Mail: info-br@deublin.com

DEUBLIN Mexico
Norte 79-A No. 77, Col. Claveria
02080 Mexico, D.F.
Phone: +52 55-5342 0362
Fax: +52 55-5342 0157
E-Mail: info-mx@deublin.com

ASIA

DEUBLIN China
No. 2, 6th DD Street,
DD Port Dalian, 116620, China
Phone: +86 411-8754 9678
Fax: +86 411-8754 9679
E-Mail: info-cn@deublin.com

Room 15A07, Wangjiao Plaza
No. 175 East Yan'an Road, Huangpu District
Shanghai 200002
Phone: +86 21-5298 0791
Fax: +86 21-5298 0790
E-Mail: info-cn@deublin.com

DEUBLIN Asia Pacific
51 Goldhill Plaza
#17-02 Singapore 308900
Phone: +65 6259-92 25
Fax: +65 6259-97 23
E-Mail: info-sg@deublin.com

DEUBLIN Japan
2-13-1, Minamihanayashiki, Kawanishi City
Hyogo 666-0026, Japan
Phone: +81 72-757 0099
Fax: +81 72-757 0120
E-Mail: info-jp@deublin.com

2-4-10-3F, Ryogoku, Sumida-ku
Tokyo 130-0026, Japan
Phone: +81 35-625 0777
Fax: +81 35-625 0888
E-Mail: info-jp@deublin.com

4-1-13-201 Sakae
Ichinomiya, Aichi 491-0858, Japan
Phone: +81 586-73 0222
Fax: +81 586-73 0223
E-Mail: info-jp@deublin.com

DEUBLIN Korea
Star Tower #1003, Sangdaewon-dong 223-25, Jungwon-gu, Seongnam-si, Gyeonggi-do, South Korea
Phone: +82 31-8018 5777
Fax: +82 31-8018 5780
E-Mail: info-kr@deublin.com

EUROPE

DEUBLIN Germany
Florenz-Allee 1
55129 Mainz, Germany
Phone: +49 6131-49980
E-Mail: info-de@deublin.com

DEUBLIN Italy
Via Guido Rossa 9 - Loc. Monteveglio
40053 Comune di Valsamoggia (BO), Italy
Phone: +39 051-835611
Fax: +39 051-832091
E-Mail: info-it@deublin.com

DEUBLIN Austria
Lainzer Straße 35
1130 Wien, Austria
Phone: +43 1-8768450
Fax: +43 1-876845030
E-Mail: info-at@deublin.com

DEUBLIN France
61 Bis, Avenue de l'Europe
Z.A.C de la Malnoue
77184 Emerainville, France
Phone: +33 1-64616161
Fax: +33 1-64616364
E-Mail: info-fr@deublin.com

DEUBLIN Poland
ul. Bierutowska 57-59
51-317 Wrocław, Poland
Phone: +48 71-3528152
Fax: +48 71-3207306
E-Mail: info-pl@deublin.com

DEUBLIN Spain
C/ Lola Anglada, 20
08228 Les Fonts (Terrassa), Spain
Phone: +34 93-221 1223
E-Mail: info-es@deublin.com

DEUBLIN United Kingdom
6 Sopwith Park, Royce Close, West Portway
Andover SP10 3TS, UK
Phone: +44 1264-33 3355
Fax: +44 1264-33 3304
E-Mail: info-uk@deublin.com

MT 232 | 05.2023 | ©2023 Deublin Company